PYRAMIDSOLUTIONS

VISIONARY SOLUTIONS ▲ EXCEPTIONAL RESULTS

Ethernet-J1939 BridgeWay User Manual

Part No. BW4031
Publication: PUB-BW4031-003

Pyramid Solutions, Inc.
30200 Telegraph Road, Suite 440
Bingham Farms, MI 48025

www.pyramidsolutions.com | P: 248.549.1200 | F: 248.549.1400

Table of Contents

Warranty **1**

Preface **2**
- **Important User Information** **2**
- **Related Documentation** **2**
- **Licenses and Trademarks** **2**

BridgeWay Module Description **3**
- **Overview** **3**
- **Theory of Operation** **4**
  - I/O Data to J1939 PGNs 4
  - Explicit Message Bridging to J1939 4
- **J1939 Features** **5**
- **Ethernet Features** **6**
- **System Requirements** **7**
  - Required Hardware 7
  - Optional Hardware 7
  - Required Software 7

Installation **8**
- **Installation and Operation Requirements** **8**
- **Mounting** **10**
  - DIN Rail Mounting 10
  - Wall Mounting 11
- **Power and Network Connections** **12**
- **Connecting Power** **12**
- **Connecting J1939** **13**
- **Connecting to Ethernet** **13**
- **Configuration Port Connector** **13**

Configuration **14**
- **Starting BridgeWay Configuration Tool (BWConfig)** **14**
  - Installing the Tool 14
  - Connecting to the BridgeWay Module 14
  - Starting the Tool 14
- **BWConfig User Interface** **15**
  - Main View 15
  - Menus 16
  - View Selector 19
  - View Area 19
  - Billboard 19
  - Event Log Pane 19
  - Title Bar 19
  - Connection Status Icon 19
- **Working with BridgeWay Configurations** **20**
  - Current and Pending 20

Uploading and Downloading 20
New Configuration Workspaces 20
Factory Default Configuration 20
Ethernet Network Configuration 21
J1939 Network Configuration 25
Setting the J1939 Name 27
Setting the J1939 Network Address List 28
I/O Table Configuration 29
Inputs Versus Outputs 29
I/O Configuration Limits 29
Input and Output Buffer Configuration 30
I/O Data Point Configuration 34
DTC Table Data Point Configuration 40
Common Parameters Workspace Option 43

Example Applications 45
Read and Write PGN and Diagnostic Data 45
Application Description 45
BridgeWay Configuration 46
Padding Data to Required Message Length 49

EtherNet/IP Interface 50
Product Features 50
CIP Objects 50
CIP Messaging 50
I/O Messaging 51
Assembly Objects and Connections 52
Assembly Instances 52
Connection Points 52
Input Assembly Format 53
Output Assembly 54
Status Assembly 55
Run/Idle Control 57
Run/Idle Control with I/O Connection 57
Run/Idle Control with Explicit Messages 57
Interaction with Modbus TCP 57
I/O Data Summary 58
Using ControlLogix with the BridgeWay 59

Modbus TCP Interface 60
Supported Modbus Commands 60
Supported Modbus Exception Codes 61
Modbus TCP Register Addressing 62
Modbus Register 101 62
Input Buffer Addressing 63
Output Buffer Addressing 64
Status Addressing 65
Modbus Addressing Examples 65
Register Data Content 66
Input Data 66

Output Data 67
Status Data 68
Run/Idle Control 70
Interaction with EtherNet/IP 70
I/O Data Summary 71
I/O Data Endian Format 72

J1939 Interface 73
Address Management 73
Single Configured Address 73
Multiple Configured Addresses 73
Address Loss 73
Request for Address Claimed 74
Communications Methods 74
Message Transmission 75
Data Point to Message Relationship 75
Message Assembly 75
Automatic Transmission 75
Handling Request PGNs 76
Destination Addresses 76
Message Priority 76
Receiving Messages 77
Handled Messages 77
Input Buffer Update 77
Parameter Timeout Indication 78
Transport Protocol for Large Messages 79
Transmission of Large Messages 79
Reception of Large Messages 79
Limitations 79
J1939 Diagnostic Messages 80
Diagnostic Table Format 80
Bus-Off Reset Option 83
Option Disabled 83
Option Enabled 83
Offline Detection 84
Online/Offline Status Indication 84
How Offline Detection Works 84
Offline Detection Message and Timer 85
Offline Detection with Offline Detection Message Disabled 85
Offline Detection with Offline Detection Message Enabled 86
J1939 Baud Rate 86

Ethernet to J1939 Message Bridging 87
Sending J1939 Messages from Ethernet 87
Bridged Message Fields 87
Bridged Message Transmission 88
Bridged Message Transmission Result 88
EtherNet/IP Message Bridging 89
Bridged Message CIP Request 89
Bridged Message CIP Response 90

EtherNet/IP Bridging Examples 91
Modbus TCP Message Bridging 92
Bridged Message Request Registers 92
Bridged Message Result Registers 93
Modbus TCP Bridging Examples 94

Status and Diagnostics 95
BridgeWay LEDs 95
BridgeWay Status LED 95
J1939 Network Status LED 96
J1939 Module Status LED 97
Ethernet Network Status LED 97
Ethernet Module Status LED 98
Ethernet Network LEDs 98
Ethernet Link/Activity LED 98
Ethernet Speed LED 98
BWConfig Status View 99
Status Tab 99
Diagnostic Counters Tab 101
BridgeWay Web Pages 102
Web Status Tabs 102
Web I/O Table Tabs 102
Status Data 102

Specifications 103
General 103
Certifications 103
Electrical 103
Environmental 103
Emission and Immunity 103
Certifications 104
Side Label 104
I/O Table Configuration Sizes and Limits 105
Input 105
Output 105
Status 105
Data Points 105
PGN Messages 105
J1939 Specifications 105
Message Types 105
Addressing 105
Transport Protocol Sessions 105

Connectors 106
Power 106
J1939 106
Ethernet 106
USB 106

Support 107
Technical Product Assistance 107

Contact Information 107

Warranty

Pyramid Solutions warrants solely to the initial end-user buyer of this product that this product will, for one year after shipment by Pyramid Solutions (the "Warranty Period"), conform to Pyramid Solutions' written specifications for this product.

Pyramid Solutions' sole and exclusive obligation, and Buyer's sole remedy for failure of this product to conform to the above warranty, is, at the option of Pyramid Solutions, that Pyramid Solutions will repair or replace this product or refund the monies paid for this product. The purchaser must notify Pyramid Solutions of any nonconformity during the Warranty Period. In the case of replacement of a non-conforming product, the Warranty Period will be tolled beginning on the date upon which Pyramid Solutions receives the non-conforming product and will begin to run again when the purchaser of this product receives the repaired or replacement product.

The warranty will not apply if this product: (1) fails, malfunctions, or is damaged as a result of handling, installation, maintenance, removal, modification or repair other than as specified in Pyramid Solutions' then-current user manual or similar documentation; (2) suffers a casualty or is subjected to abuse (including electrostatic discharge) or improper use; (3) is altered or damaged so that Pyramid Solutions is unable to verify the defect with its normal test equipment; or (4) is not returned in the same or equivalent container in which it was shipped.

EXCEPT AS EXPRESSLY WARRANTED ABOVE, THIS PRODUCT IS SUPPLIED "AS IS" AND WITH ALL FAULTS. PYRAMID SOLUTIONS MAKES NO OTHER REPRESENTA- TIONS OR WARRANTIES, WHETHER EXPRESS OR IMPLIED, WITH RESPECT TO THIS PRODUCT AND PYRAMID SOLUTIONS EXPRESSLY DISCLAIMS ALL WARRANTIES AS TO ITS QUALITY, PERFORMANCE, MERCHANTABILITY, NON-INFRINGEMENT, OR FITNESS FOR A PURPOSE.

THE PURCHASER'S REMEDIES ARE EXPRESSLY LIMITED TO THE EXCLUSIVE REME- DIES STATED ABOVE. NEITHER PYRAMID SOLUTIONS NOR ANY DIRECT OR INDI- RECT SUPPLIER TO PYRAMID SOLUTIONS WILL BE LIABLE FOR ANY INCIDENTAL, CONSEQUENTIAL, SPECIAL, PUNITIVE, OR INDIRECT DAMAGES (INCLUDING, BUT NOT LIMITED TO, LOSS OF REVENUE OR PROFITS) ARISING OUT OF, RELATED TO, OR CAUSED, DIRECTLY OR INDIRECTLY BY, THE USE OR TRANSFER OF THIS PROD- UCT BY THE PURCHASER OF THIS PRODUCT OR ANY CUSTOMER OR SUCCESSOR HOLDER OF THIS PRODUCT, BY THE PERFORMANCE OR FAILURE TO PERFORM OF PYRAMID SOLUTIONS OR ANY DIRECT OR INDIRECT SUPPLIER TO PYRAMID SOLU- TIONS, OR IN ANY OTHER RESPECT, BY ANY OTHER ACT OR OMISSION OF PYRA- MID SOLUTIONS OR ANY DIRECT OR INDIRECT SUPPLIER TO PYRAMID SOLUTIONS, OR BY ANY OTHER CAUSE. IN NO EVENT WILL PYRAMID SOLUTIONS' OR ITS SUPPLIERS' TOTAL LIABILITY TO ANY PERSON FOR ANY CLAIM EXCEED THE SUM PAID TO PYRAMID SOLUTIONS FOR THE PRODUCT(S) GIVING RISE TO THE LIABILITY.

THESE LIMITATIONS APPLY REGARDLESS OF WHETHER PYRAMID SOLUTIONS OR ITS SUPPLIER(S) IS (ARE) OR WAS (WERE) AWARE OF THE POSSIBILITY OF ANY DAMAGES AND REGARDLESS OF WHETHER ANY LIMITATION CAUSES A REMEDY TO FAIL OF ITS ESSENTIAL PURPOSE.

Preface

Important User Information

The data and illustrations found in this document are not binding. We reserve the right to modify our products in line with our policy of product development. The information in this document is subject to change and should not be considered as a commitment by Pyramid Solutions. Pyramid Solutions assumes no responsibility for errors that may appear in this document

There are many applications of the BridgeWay module. Those responsible for the use of this device must satisfy themselves that all necessary steps have been taken to verify an application meets all performance and safety requirements including any applicable laws, regulations, codes, and standards.

The illustrations and samples in this guide are intended solely for the purpose of example. Pyramid Solutions does not assume responsibility or liability for actual use based upon the examples shown in this publication.

See the *Installation and Operation Requirements* section for important safety and installation details.

Related Documentation

Document Name	Author	Web Page
EtherNet/IP Specification	ODVA	www.odva.org
Modbus Application Protocol Specification	Modbus Org	www.modbus.org
Modbus Messaging on TCP/IP Implementation Guide	Modbus Org	www.modbus.org
J1939 Recommended Practice	SAE	www.sae.org

Table 1. Related Documentation

Licenses and Trademarks

EtherNet/IP™ is a trademark of ODVA.
Modbus is a trademark of Modbus Organization.
Microsoft and Windows are trademarks of Microsoft Corporation.

BridgeWay Module Description

Overview

The BW4031 Ethernet-J1939 BridgeWay module enables monitoring and control over an SAE J1939 network from an EtherNet/IP or Modbus TCP capable Programmable Logic Controller (PLC) or other EtherNet/IP Scanner or Modbus TCP Master device or application ("controller"). Data from J1939 messages are mapped to I/O Table locations, making them accessible to be read or written by compatible Ethernet controller(s). The BridgeWay operates as an EtherNet/IP Adapter (server), allowing J1939 data to be transferred to and from an EtherNet/IP Scanner (client) device using I/O or Explicit messages. The module also operates (if configured by the user) as a Modbus TCP slave (server), allowing J1939 data to be accessed as Modbus registers by a Modbus TCP master (client) controller.

Examples of applications of the Ethernet-J1939 BridgeWay:

- An interface used on a diesel generator package to access engine parameters from a PLC locally or for remote monitoring and control.

- An on-vehicle gateway used to interface the J1939 vehicle network to an on-board industrial automation based control system.

- A gateway used in diesel engine driven field equipment to enable a PLC to monitor engine parameters and to control the engine and transmission through J1939.

Theory of Operation

The BridgeWay appears as a single device on either network using standard protocol mechanisms. No special, or extended, protocol features are required of the devices on either network to read and write the data flowing through the I/O Table; all cross-network activity is transparent to the devices on either network.

I/O Data to J1939 PGNs

The BridgeWay provides centralized data storage, the I/O Table, for data that is shared between the J1939 and Ethernet networks. Data is placed into the I/O Table by one network interface, allowing the data to be read by the other network interface.

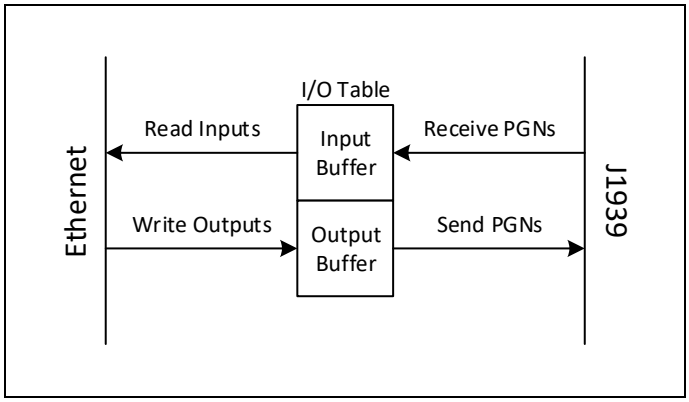

Figure 1. I/O Table Operation

Explicit Message Bridging to J1939

The BridgeWay provides the ability to send a message on the J1939 network using an explicit message from the Ethernet network. This is done through the Message Bridge which is has a CIP object interface and a set of Modbus register addresses. Note that, since J1939 is not a request/response protocol, the message response to the Ethernet request indicates only whether the PGN was successfully sent.

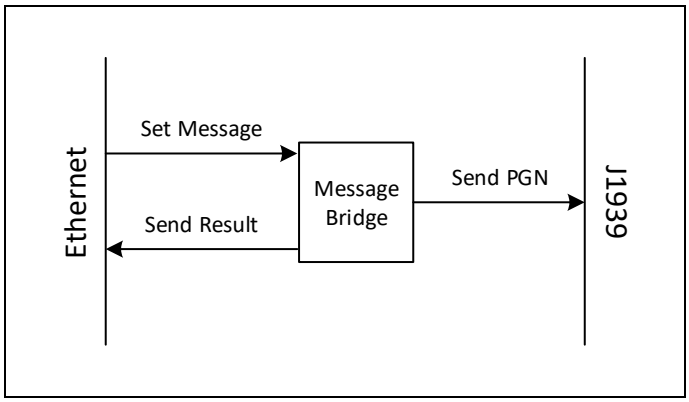

Figure 2. Message Bridging Operation

J1939 Features

- Transmission and reception of all types of fixed-length J1939 messages, including PDU1, PDU2, broadcast and destination specific.
- Monitoring of DM1 (active diagnostics) and DM2 (previously active diagnostics) messages.
- Complete network address management including address claim, protection, and yield on higher priority conflict.
- Network address can be self-configurable over a range of addresses.
- Configurable J1939 NAME for easy integration into a system or machine.
- J1939 Transport Protocol for transmission and reception of large messages (9 - 1785 bytes). Both connection based (RTS/CTS) and broadcast (BAM) are supported.
- Supported baud rates of 125K, 250K and 500K baud, with 250K being the default.
- Configurable CAN bus-off reset option will reset the network interface and attempt to return to online when a CAN bus-off condition is detected.
- Configurable offline detection provides indication to the Ethernet controller that the BridgeWay is not connected to an active network.

Ethernet Features

- Supports the EtherNet/IP protocol, Adapter Class with I/O Server, and Message Server.
- Supports the Modbus TCP protocol with up to 4 simultaneous connections. Conforms to the Modbus TCP specification 1.0.
- Support for either static IP address or DHCP.
- Supports IP address conflict detection conforming to RFC 5227 and the ODVA EtherNet/IP specification.
- Network speed may be configured to 10Mbsps, 100Mbps or auto negotiated. Duplex may be configured to half, full or auto negotiated.
- EtherNet/IP and Modbus TCP may be supported simultaneously or either protocol may be disabled to meet system requirements.
- HTTP Web server provides information on the current status and configuration of the module.

System Requirements

The following hardware and software components are needed to use the Ethernet-J1939 BridgeWay.

Required Hardware

- BridgeWay module.
- J1939 network connection.
- Ethernet cabling.
- EtherNet/IP or Modbus TCP Controller or Client with access to the Ethernet network.
- 24 VDC power connection
- PC with USB port to execute BridgeWay Configuration Tool (BWConfig).
- Micro USB cable to connect PC running BWConfig to the BridgeWay.

Optional Hardware

- DIN rail to mount the BridgeWay.

Required Software

- BridgeWay Configuration Tool software (BWConfig) to configure the BridgeWay.
- BWConfig requires that the PC be running Microsoft Windows 7 or higher.
- EDS file, BW4031.eds, downloadable from the Pyramid Solutions web site, if EtherNet/IP is to be used.

Installation

Installation and Operation Requirements

Power, input, and output (I/O) wiring must be in accordance with Class 1, Division 2 wiring methods - article 501-4(b) of the National Electric Code, NFPA 70 and in accordance with local codes.

Field wiring terminal markings (wire type (Cu only, 14-30 AWG (0.2546-1.63mm)).

Terminal tightening torque must be between 5-7 lb-in (0.5-0.8 Nm).

For use in Class 2 circuits only.

Suitable for surrounding temperature of 70 degrees C maximum, -25 degrees C minimum.

Use 105 °C copper (Cu) wire only.

Use Copper Conductors Only.

Special conditions for safe use

Use in Overvoltage Category I Pollution Degree 2 Environment conforming to EN 60664-1.

This equipment shall be installed in an enclosure that provides a degree of protection not less than IP54 in accordance with EN 60079-15.

The enclosure must have a door or cover accessible only by the use of a tool.

The equipment must be installed with a transient suppressor on the supply that does not exceed 140% (33.6 V DC) of the nominal rated supply voltage.

	FAIL-SAFE OR CRITICAL OPERATIONS This product is not designed, intended, authorized, or warranted to be suitable for use or resale as control equipment in, or for other applications related to, hazardous or potentially-hazardous environments or applications requiring high-availability or fail- safe performance, such as in the operation of nuclear facilities, aircraft navigation or communications systems, air traffic control, life support, public works, weapons systems, or any other application in which the failure of a product could lead to property damage, death, personal injury, or environmental damage.

	EXPLOSION HAZARD Substitution of components may impair suitability for class 1, Division 2.

	EXPLOSION HAZARD When in hazardous locations turn off power before replacing or wiring modules.

	EXPLOSION HAZARD Do not disconnect equipment unless power has been switched off or the area is known to be nonhazardous.

Mounting

The BridgeWay can be physically mounted onto a DIN rail or, if installed in areas exposed to vibration, on a wall for more stability.

DIN Rail Mounting

	To mount the BridgeWay: Make sure the DIN rail locking tab on the back of the module is in the closed position, i.e. pushed all the way up. Hook the module on the DIN rail. (1) Push the module against the DIN rail to make it snap on. (2)
	To Unmount the BridgeWay: Use a screwdriver to pull the DIN rail locking tab on the back of the module to the open position, i.e. pulled all the way down. (1) Unhook the module from the DIN rail. (2)
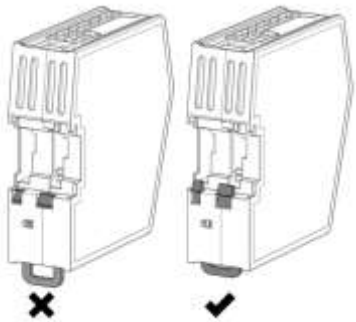	**NOTE:** Do not leave the module with the DIN rail locking tab in the open position. This may eventually wear the mechanism out so that it cannot be used efficiently. Be sure to push the locking tab back into the closed position after unmounting the module.

Wall Mounting

The wall mount option may be used if the BridgeWay is to be placed in an environment exposed to vibration. Wall mounting offers more stability than the traditional DIN rail mounting.

NOTE: The Bridgeway should be mounted in a standing-up position to ensure constant air flow.
NOTE: When the BridgeWay is wall mounted, the Ground connection must be made via the power connector.

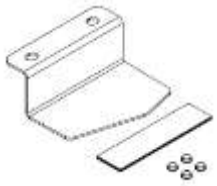	The wall mounting accessory package should contain: - Metal frame - Industrial Velcro - (4) plastic vibration dampers
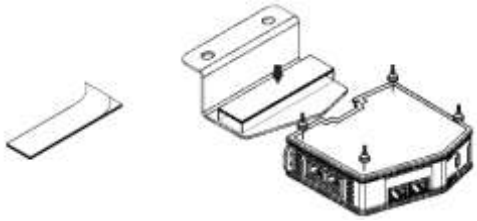	Remove the plastic adhesive protection from one side of the Velcro and attach the Velcro to the metal frame. Attach the four vibration dampers to the BridgeWay on the side that will face the wall.
	Remove the plastic adhesive protection from the other side of the Velcro.
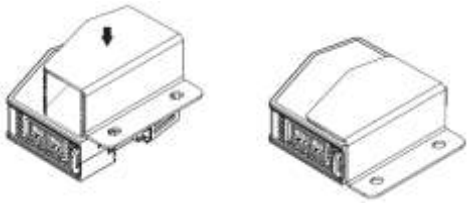	Turn the BridgeWay over so that the vibration dampers are facing down. Fasten the metal frame to the BridgeWay by pressing the frame firmly against the module to attach the Velcro to the BridgeWay.
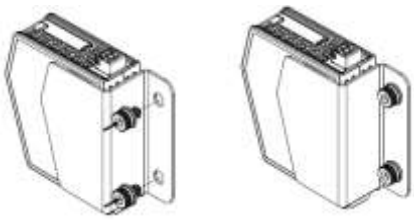	Attach the metal frame and the BridgeWay to the wall using screws and washers (not included).

Power and Network Connections

The locations of the connectors are shown in the figure below.

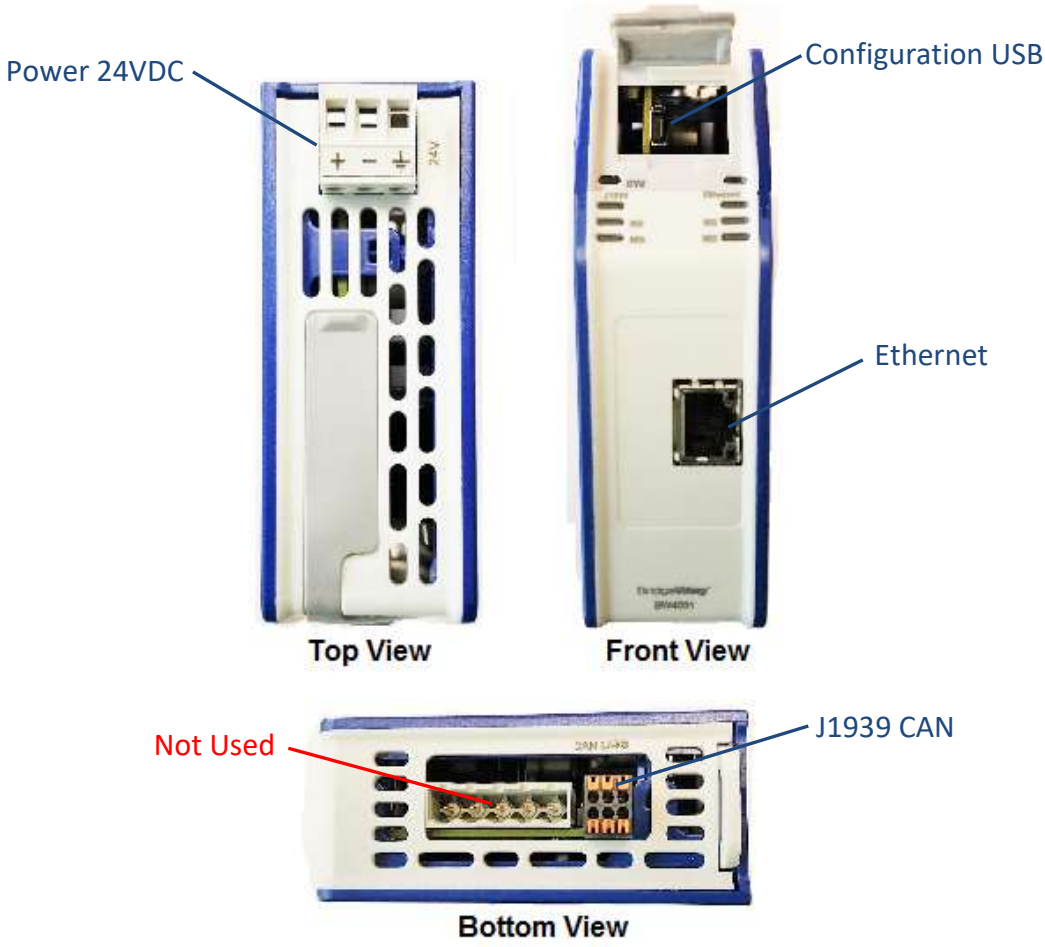

Figure 3. Connector Locations

Connecting Power

The BridgeWay requires 24 volts DC power on the 3-position terminal block connector on the top of the module.

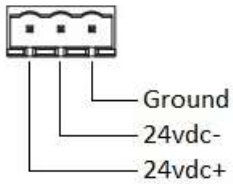

Figure 4. Power Connector

Connecting J1939

J1939 is connected to the 6-position terminal block connector on the bottom of the module.

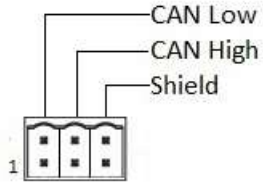

Figure 5. J1939 Connector

The CAN High and Low signal lines should be connected to the CAN High and Low connections respectively on all devices on the network. The signal lines should not be swapped on any device connections.

The BridgeWay module does not provide CAN network termination internally. Any termination required by the network (120 ohm) must be added during installation.

Connecting to Ethernet

The Ethernet connection uses a standard RJ45 connector. The Ethernet socket is on the front of the module.

Configuration Port Connector

The Configuration Tool utilizes USB for communications with the BridgeWay. A USB cable with a Micro-B connector is required to connect to the module. The USB connector is located under the rubber flap on the front of the module; lift the flap for access to the connector.

Configuration

This chapter describes how the Ethernet-J1939 BridgeWay is configured using the new BWConfig 2.0 BridgeWay Configuration Tool ("BWConfig"). Detailed descriptions of each configurable parameter in the BridgeWay are provided as well as how they are configured.

The next chapter walks the reader through the configuration of an example application to illustrate how the configurable parameters are used in a real-world application.

Starting BridgeWay Configuration Tool (BWConfig)

The BridgeWay Configuration Tool allows you to configure the parameters associated with the Ethernet and J1939 network interfaces as well as to set up the contents and layout of the I/O Table.

BWConfig is a Microsoft Windows application that communicates with a BridgeWay over a USB connection. BWConfig is compatible with Microsoft Windows 7 and later.

Installing the Tool

Install BWConfig by running *InstallBWConfig.exe* which can be downloaded from the Pyramid Solutions web site.

Connecting to the BridgeWay Module

Connect the PC running BWConfig to the BridgeWay module using a standard USB-to-Micro-USB cable between the PC USB port Micro-USB connector on the module. It does not matter which PC USB port you use, BWConfig will scan each available port and detect the connection automatically.

Starting the Tool

Launch the BridgeWay Configuration Tool from the *Pyramid Solutions → BWConfig* folder in the Windows Start Menu (Windows 7) or App list (Windows 8/10). It can also be run from the BridgeWay Configuration Tool Desktop shortcut.

When BWConfig is started, it will attempt to locate a BridgeWay module attached to the PC's USB port. If a module is detected, the Connection Status icon will show a green circle with a chain link.

If a module is not connected to the PC or is powered off when the tool is started, the Connection Status icon will show a yellow circle with a broken chain. Make sure that the module is powered up and the USB cable is connected. BWConfig will automatically detect the module. If the BridgeWay is not detected, disconnect the USB cable from the PC, wait 15 seconds, then reconnect the cable. The module should be detected within a few seconds.

BWConfig User Interface

Main View

When BWConfig is run, the user is presented with the main view. The main view is divided into seven different areas, as shown in the figure below. Those areas are

1. Menu
2. View Selector
3. Billboard
4. View Area
5. Event Log Pane
6. Title Bar
7. Connection Status Icon

Figure 6. BWConfig Main View

Menus

File Menu

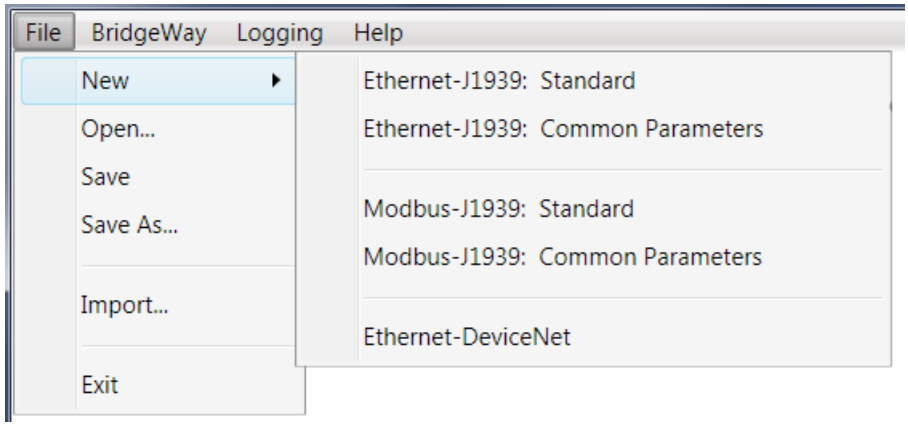

Figure 7, BWConfig File Menu

New	Creates a new workspace. The type of BridgeWay is selected in the submenu. This will create a new configuration for the specified module type with default configuration values.
Open…	Loads a previously saved workspace from a file with a ".BWNXG" extension. If the current workspace has unsaved changes, the user is given the option to save the changes before the new one is loaded.
Save	Saves the current workspace to a file. The current file name is shown in the title bar. If the current workspace is unnamed, a Save As runs instead.
Save As…	Asks the user for a file name, and then saves the current workspace to that file.
Import…	Creates a workspace from a legacy BridgeWay configuration file.
Exit	Exits BWConfig. If the current workspace has unsaved changes, the user is given the option of saving the changes before the tool is closed.

BridgeWay Menu

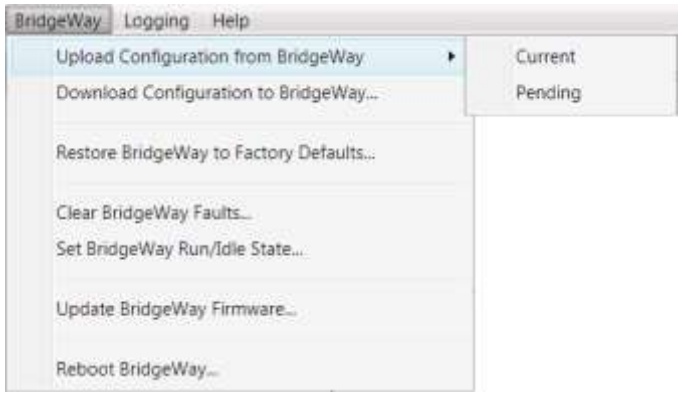

Figure 8. BWConfig BridgeWay Menu

Upload Configuration from BridgeWay → Current…	Reads the current configuration running in the connected BridgeWay and creates a new workspace using those values.
Upload Configuration from BridgeWay → Pending…	Reads the pending configuration from the connected BridgeWay and creates a new workspace using those values.
Download Configuration to BridgeWay…	Writes the current workspace settings to the pending configuration of the connected BridgeWay. The module must be rebooted in order for any changes to the pending configuration to take effect.
Restore BridgeWay to Factory Defaults…	Sets the pending configuration in the connected BridgeWay to the default settings. The module must be rebooted in order for the default settings to take effect.
Clear BridgeWay Faults…	Clears any sticky faults in the connected BridgeWay and resets protocol counters.
Set BridgeWay Run/Idle State…	Switches the connected BridgeWay between Run and Idle mode.
Update BridgeWay Firmware…	Writes new firmware to the connected BridgeWay.
Reboot BridgeWay	Reboots the connected BridgeWay.

Logging Menu

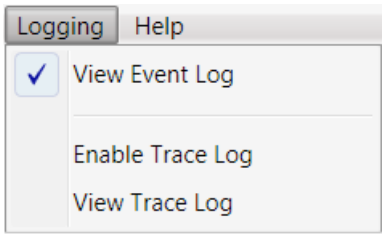

Figure 9. BWConfig Logging Menu

View Event Log	Shows/hides the Event Log Pane.
Enable Trace Log	Enables/disables diagnostic trace logging.
View Trace Log	Displays the Trace Log window.

Note: Trace logging provides information about BWConfig operations and USB communications and may be used by Pyramid Solutions Technical Support to diagnose an issue.

Help Menu

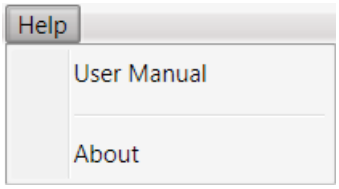

Figure 10. BWConfig Help Menu

User Manual	Displays the user manual associated with the current BridgeWay type.
About	Displays information about BWConfig.

View Selector

The view selector chooses which of the current workspace's views will be displayed in the View Area -- Configuration View or Status View.

Selecting the Gear icon will display the Configuration View.
Selecting the Bits icon will display the Status View.

View Area

The current workspace's Configuration and Status views are displayed in the View area. The View Selector chooses which view is visible.

Billboard

The Billboard area indicates the current view displayed and the BridgeWay type.

Event Log Pane

The Event Log Pane displays a list of events that have occurred since the BWConfig tool was started. These events include items such as errors, BridgeWay USB connections, loading and saving workspaces, importing configurations, etc.

The contents of the event log can be copied to the Windows clipboard to aid Technical Support in troubleshooting issues.

Title Bar

The Title Bar displays the name of the current workspace.

If a new workspace has not been saved, the Title Bar will display "New Workspace".

If the workspace has unsaved changes in the configuration data, the name will be followed by an asterisk (*).

Connection Status Icon

The connection status shows the current state of the BridgeWay USB communications.

Connected	
Disconnected	

Working with BridgeWay Configurations

Current and Pending

The BridgeWay module holds 2 sets of configuration settings, the Current configuration, and the Pending configuration.

The Current configuration is the configuration settings that the module is currently using. The Current configuration is loaded from flash memory when the BridgeWay is powered up. Changes made to the configuration in BWConfig do not affect the Current configuration.

The Pending configuration is the configuration settings that are stored flash memory on the module. The Pending configuration holds any changes that have been made in BWConfig.

Uploading and Downloading

When a configuration is Uploaded, the settings are read from the BridgeWay module into the current BWConfig workspace. Either the Current or Pending configuration may be uploaded, allowing the workspace to be loaded with settings that are currently running or stored in flash respectively.

When a configuration is Downloaded, the settings in the current BWConfig workspace are written to the BridgeWay module. A downloaded configuration is always written to the Pending configuration stored in flash. Downloaded configuration changes require a module reset to take effect.

New Configuration Workspaces

Two types of configuration workspaces may be created in BWConfig: Standard or Common Parameters.

A new Standard workspace is created with factory default settings for the type of BridgeWay being configured.

A new Common Parameters workspace contains factory default settings, plus additional I/O Table configuration. The I/O Table is populated with a collection of commonly used J1939 parameters. See the I/O Table Configuration section below for more details.

Factory Default Configuration

The BridgeWay may have its configuration reset to factory default settings. This is done through the *BridgeWay → Restore BridgeWay to Factory Defaults…* menu command in BWConfig. Factory default configuration settings are written to the Pending configuration. The module must be reset for the updated configuration to take effect.

Ethernet Network Configuration

The Ethernet network configuration is viewed and updated in the Interfaces tab of the Configuration view.

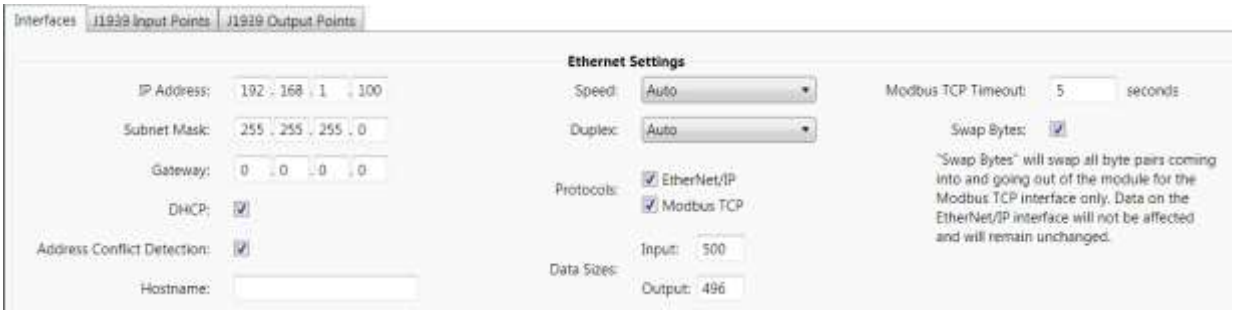

Figure 11. BWConfig Ethernet Network Configuration View

Parameter	Description	Range	Default
IP Address	The IP address the module will use. If DHCP is enabled this address is ignored.	Valid IP address	192.168.1.100
Subnet Mask	The subnet mask the module will use. If DHCP is enabled this mask is ignored.	Valid IP subnet mask	255.255.255.0
Gateway	The IP address of the network gateway. If DHCP is enabled this address is ignored. If no gateway is used on the network this may be set to 0.0.0.0.	Valid IP address or 0.0.0.0	0.0.0.0
DHCP	DHCP is enabled if checked. If checked, the module will receive its IP configuration from a DHCP server on the network. If not checked, the module will use the IP configuration set here.	Enabled Disabled	Enabled

Parameter	Description	Range	Default
Address Conflict Detection	ACD is enabled if checked. If checked, the module will check for, and defend against IP address conflicts as specified in the EtherNet/IP Specification Appendix F. If not checked, the module will send a single gratuitous ARP for an IP address claim.	Enabled Disabled	Enabled
Hostname	Ethernet IP hostname	Up to 64 characters may include letters, numbers and '-'.	Empty
Speed	Ethernet network speed. If set to 'Auto' the module will auto negotiate speed.	Auto 10Mbps 100Mbps	Auto
Duplex	Ethernet network duplex. If set to 'Auto' the module will auto negotiate duplex.	Auto Half Full	Auto
Protocols	Select the Ethernet protocols that are active. **Note:** Unless the application requires both protocols, it is recommended not to enable both to reduce the number of open Ethernet ports for security reasons.	Either or both protocols	EtherNet/IP

Parameter	Description	Range	Default
Data Sizes	The size in bytes of the I/O Table. If EtherNet/IP is enabled, the sizes are limited to 500/496 bytes as this is the largest EtherNet/IP I/O connection supported by the module. If only Modbus is enabled, the module will support up to 2048 byte buffers. Some EtherNet/IP devices only support smaller I/O connections. Recommended input and output sizes for some devices are listed below: ControlLogix 500/496 SLC 5/05 248/244 MicroLogix 252/248	EtherNet/IP: In: 4–500 Out: 4–496 Modbus only: In: 4–2048 Out: 4–2048	In: 500 Out: 496
Modbus Timeout	The Modbus Timeout option provides a means to detect the loss of the Modbus Scanner communications. If no Modbus requests are received within the configured timeout period, the module Run/Idle mode will be set to Idle. This parameter is only available if the Modbus protocol is enabled.	1 – 65535	5

Parameter	Description	Range	Default
Swap Bytes	Modbus I/O byte swapping is enabled if checked. Enabling byte swapping will cause the Modbus I/O data to be swapped on 16-bit word boundaries when transferred between Modbus and J1939. This is useful since Modbus is a Big-Endian network. This parameter is only available if the Modbus protocol is enabled. **Note:** Byte swapping has no effect on EtherNet/IP data.	Enabled Disabled	Enabled

Table 2. Ethernet Network Configuration Parameters

J1939 Network Configuration

The J19393 network configuration is viewed and updated in the Interfaces tab of the Configuration view below the Ethernet network settings.

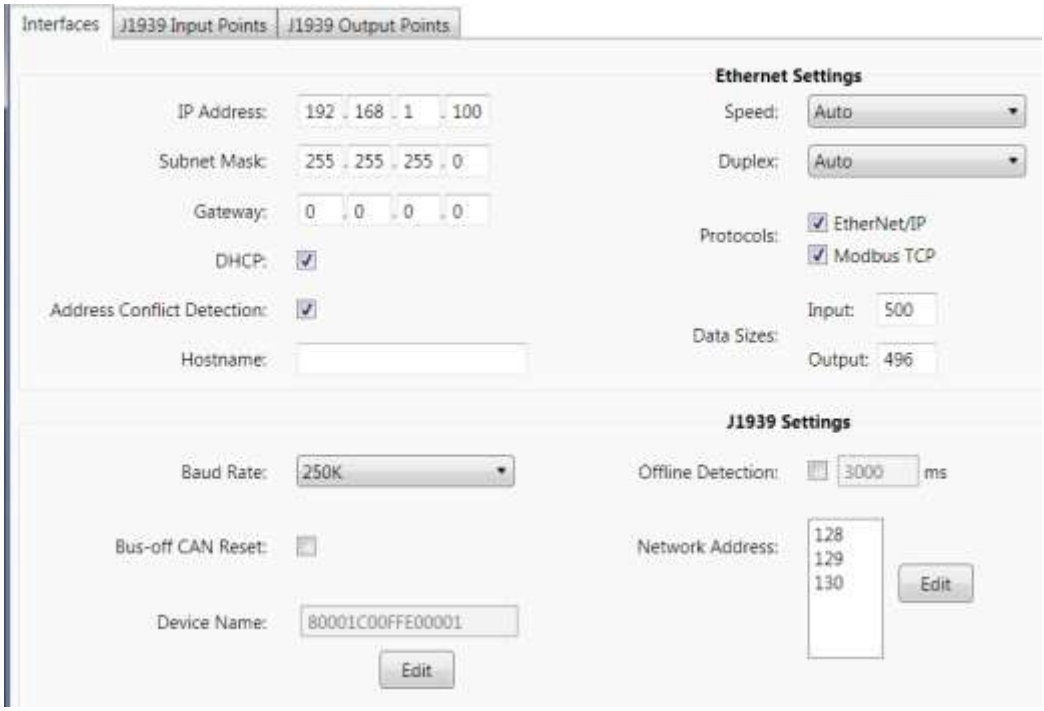

Figure 12. BWConfig J1939 Network Configuration View

Parameter	Description	Range	Default
Baud Rate	The CAN network baud rate to be used for J1939 communications. **Note:** The standard baud rate for J1939 is 250K. It is not recommended to use a different baud rate unless the application specifically requires it.	125K 250K 500K	250K

Parameter	Description	Range	Default
Bus-off CAN Reset	The Bus-Off Reset option is enabled if checked. If Bus-Off Reset is enabled, the module will reset the CAN controller and attempt to go online after a bus-off condition is detected. If Bus-Off Reset is disabled, the module will remain offline after a bus-off condition until the module is power cycled. **Note:** It is recommended that this option be disabled for most applications. If the bus-off condition is being caused by this module, continually resetting the CAN controller will cause undesirable network interruptions.	Enabled Disabled	Disabled
Device Name	The J1939 Name to be used by the module in address claim messages. Each J1939 module on the network should have a unique Name. See *Setting the J1939 Name* below for more details on configuring the Name.		80 00 1C 00 FF E0 00 01
Offline Detection	The J1939 Offline Detection option is enabled when checked. Enabling J1939 Offline Detection will allow the module to detect when it is not connected to the J1939 network when there are no Output PGN's configured. See *Offline Detection* for more details on offline detection operation.	Enabled Disabled 1000 – 60000ms	Disabled 3000ms

Parameter	Description	Range	Default
Network Address	The list of addresses that the module may use on the J1939 network. The module will only claim a single address at a time. This is the list of possible addresses that may be used if a conflict is detected on the address it attempts. See *Address Management* for details on how the address list is used.	Each address must be in the range of 0 – 253 Up to 10 addresses in the list	128, 129, 130

Table 3. J1939 Network Configuration Parameters

Setting the J1939 Name

The J1939 Name is a 64-bit value that must be unique for every module on a given J1939 network. The Name is a collection of bits and values; the meaning and format of the Name data is defined in the J1939-81 specification.

The J1939 Name value is set using the J1939 Device Name dialog.

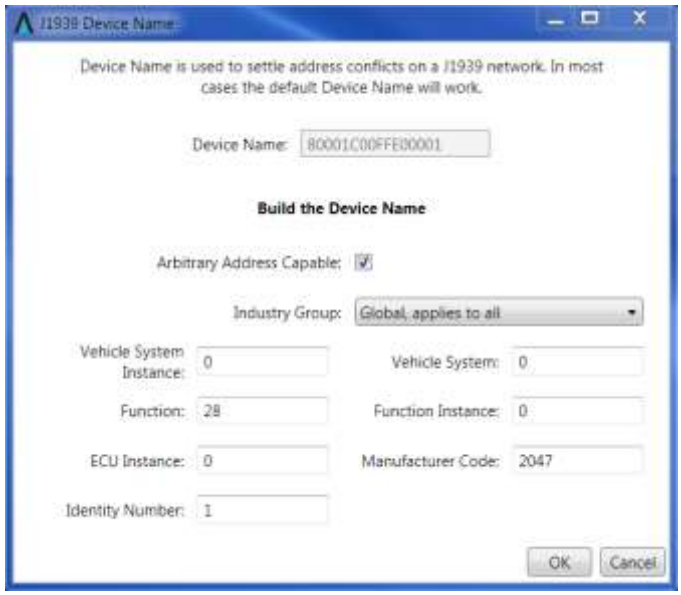

Figure 13. BWConfig J1939 Name Dialog

Each component of the Name value is broken out and displayed in the lower fields of the dialog; components can be edited individually using these fields. The overall Name value is represented in hexadecimal format at the top of the dialog. The Name value is updated as component values are changed.

Pressing the OK button will update the J1939 Name value in the configuration workspace.

Setting the J1939 Network Address List

The address list is set using the J1939 Network Addresses dialog.

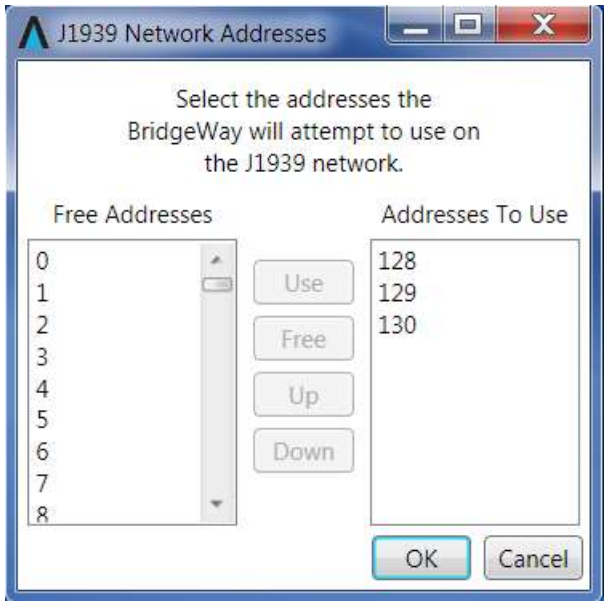

Figure 14. BWConfig J1939 Network Addresses Dialog

The configured address list is on the right, with the available addresses in the left list.

An address is added to the address list by selecting the address in the Free Address list and pressing <Use>.

An address is removed from the address list by selecting the address in the Addresses to Use list and pressing <Free>.

Addresses can be moved and ordered with in the address list by selecting an address and pressing the <Up> or <Down> buttons to move the address up and down in the list respectively.

Note that the address list must contain at least one address. If there is only a single address in the list, it cannot be removed until a second address is added.

Pressing the <OK> button will save the resulting address list in the configuration workspace.

I/O Table Configuration

The I/O Table configuration is used define the content and format of the input and output buffers of the I/O Table. Data that is transferred in and out of J1939 messages is mapped to locations within the I/O Table.

Inputs Versus Outputs

The input buffer of the I/O Table holds data that is collected from the J1939 network and can be read on the Ethernet network. Input data points are associated with data in messages that are received from the J1939 network.

The Output buffer of the I/O Table holds data that is received from a device on the Ethernet network and is to be sent on the J1939 network. Output data points are associated with data in messages that will be transmitted to the J1939 network.

I/O Configuration Limits

The I/O configuration is limited as follows:

- The maximum Input buffer sizes are below. These include the 32-bit Status Register so actual monitored J1939 data is 4 bytes less.
    - If EtherNet/IP is enabled: 500 bytes.
    - If only Modbus is enabled: 2048 bytes.
- The maximum Output buffer sizes are below. These include the 32-bit Command Register so actual transmitted J1939 data is 4 bytes less.
    - If EtherNet/IP is enabled: 496 bytes.
    - If only Modbus is enabled: 2048 bytes.
- Up to 200 total data points in the configuration. This is the combined number of input and output data points.
- Up to 120 different J1939 PGN's may be monitored by input data points.
- Up to 100 different J1939 PGN's may be transmitted by output data points.

Input and Output Buffer Configuration

The layout of the input and output buffers of the I/O Table is configured in the J1939 Input Points and J1939 Output Points tabs respectively.

Figure 15. BWConfig Input Points Tab

Note that the Input Points and Output Points tab views are identical except for the message Priority column, which only appears in the Output Points tab.

The table defines the I/O buffer layout. Each I/O data point is displayed as a row in the table.

The I/O data point parameters specified by the table columns are described in the next section. The I/O buffer parameters displayed in the tab around the table are described below.

Parameter	Description	Range	Default
Input/Output Size	(Display Only) The I/O Table size for the input or output buffer as configured in the Ethernet Network configuration.		

Parameter	Description	Range	Default
Data Size	The word size to be used for locating data points in the I/O Table buffers. This specifies the offset resolution used when mapping data points into the input or output buffer.	SINT (8-bit) INT (16-bit) DINT (32-bit)	SINT (8-bit) if EtherNet/IP is selected. INT (16-bit) if only Modbus TCP selected.
Align on Register Boundary	Specifies whether data points must be located on even word boundaries. If checked data points cannot be mapped off word boundaries based on the Data Size word size. If not checked data points can be mapped at bit resolution to any bit offset.	Enabled Disabled	Enabled
PGN Count	(Display Only) The number of PGNs configured in the displayed J1939 Data Points tab. The configuration is limited to 120 PGNs in the Input tab and 100 PGNs in the Output tab.		
Total Points	(Display Only) The total number of data points configured across both Input and Output tabs. The configuration is limited to 200 data points.		
Input/Output Points	(Display Only) The current number of data points configured in the displayed J1939 Data Points tab		

Table 4. BWConfig Input and Output Point Tab Parameters

Working with Input Data Points

Input data points are added, removed, and modified in the Input Points tab through the right-click context menu.

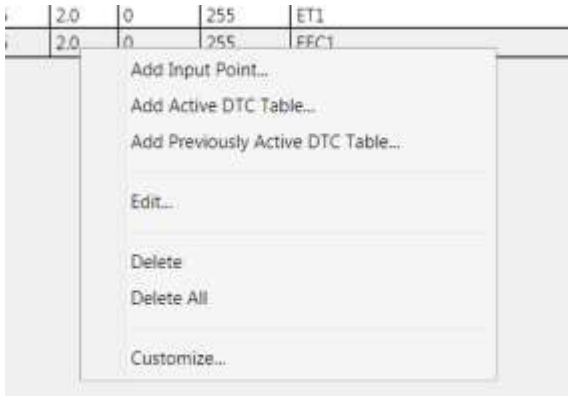

Figure 16.BWConfig Input Data Points Tab Context Menu

Add Input Point…	Add an input data point to the Input buffer configuration. The J1939 Data Point dialog will be launched to configure the new data point.
Add Active DTC Table…	Add an active DTC (DM1) data point to the Input buffer configuration. The J1939 DTC dialog will be launched to configure the data point.
Add Previously Active DTC Table…	Add a previously active DTC (DM2) data point to the Input buffer configuration. The J1939 DTC dialog will be launched to configure the data point.
Edit…	Edit the selected data point. The appropriate edit dialog will be launched to configure the selected data point. Note that data points can also be edited by double-clicking on the entry in the table.
Delete	Delete the selected data point.

Delete All	Delete all data points in the Input buffer configuration
Customize…	Configure the Input Points tab editor column layout. Columns may be hidden or their ordering changed.

Working with Output Data Points

Output data points are added, removed, and modified in the Output Points tab through the right-click context menu.

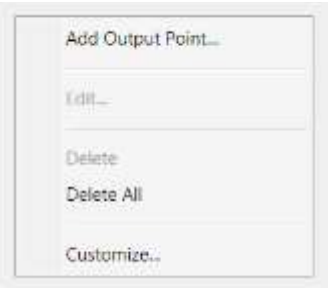

Figure 17.BWConfig Output Data Points Tab Context Menu

Add Output Point…	Add an output data point to the Output buffer configuration. The J1939 Data Point dialog will be launched to configure the new data point.
Edit…	Edit the selected data point. The edit dialog will be launched to configure the selected data point. Note that data points can also be edited by double-clicking on the entry in the table.
Delete	Delete the selected data point.
Delete All	Delete all data points in the Output buffer configuration
Customize…	Configure the Output Points tab column layout. Columns may be hidden or their ordering changed.

I/O Data Point Configuration

Each I/O data point defines a single piece of data in the either the Input or Output buffer. Data points are created or edited in the Edit J1939 Data Point dialog.

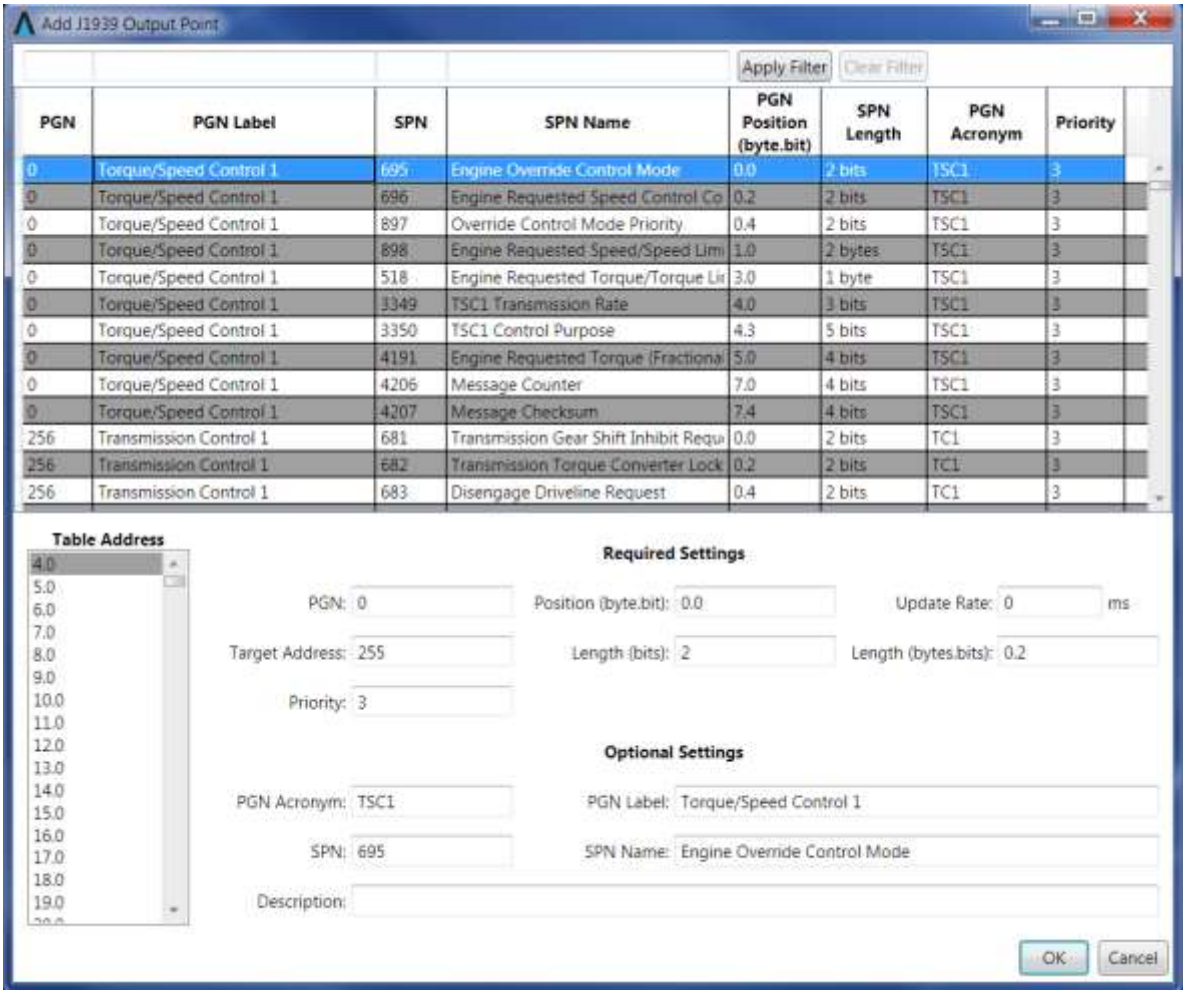

Figure 18. BWConfig Edit J1939 Data Point Dialog

Note that input and output data point editors share the same parameters except for the message Priority which only appears when editing output data points.

PGN Quick Reference Table

The table at the top of the dialog contains many of the PGNs and SPNs defined in the J1939 specification. This provides a quick reference and a way to automatically populate most of the data point parameters.

The displayed entries can be filtered by PGN and SPN number and PGN and SPN label. Enter the desired number or part of a label in the text box above the column and press the <Apply Filter> button to reduce the table to only those entries that match the filter. Pressing the <Clear Filter> button will display the entire table.

Clicking on a table entry will populate all data point parameters except the Target Address and the Description.

Locating the Data Point in the I/O Buffer

The data from the message defined by the data point is located within the input or output buffer by selecting the Table Address from the list at the left of the dialog.

To alleviate configuration of overlapping data points, only unused I/O buffer addresses are provided in the Table Address list. If a data point is configured with a data length that does not fit in the buffer space at a given address, an error is displayed and the data point cannot be saved until the location is changed.

The addresses in the list are offsets into the I/O buffer and are displayed as 'word.bit'. The word size is specified by the Data Size parameter in the associated J1939 Data Points tabs. If the Data Size is set to SINT(8-bit), the word offset is in 8-bit bytes. If the Data Size is INT(16-bit) the word offset is in 16-bit words. If the Data Size is DINT(32-bit) the word offset is in 32-bit words. Both the word and bit are specified as 0-offset: the first bit in the buffer is 0.0.

If the Align on Register Boundary parameter is checked in the associated Data Points tab, all addresses listed in the Table Address list will be at 0 bit offset, or x.0. Clearing the Align on Register Boundary checkbox will allow data points to be placed anywhere in the I/O buffer.

Output Data Point Message Transmission Length

Messages transmitted on the J1939 network are constructed using all output data points with matching PGN and target address. The data length of the message is set based on the message offsets and lengths of the data points. If a certain message length is required, output data points must be configured to ensure that data length. i.e. If a PGN message should be 8 bytes long, output data points should be configured to map data to 8 bytes of message data. This may require an output data point to pad the message; a single bit mapped to the last bit of the message will accomplish this. See an example of such a configuration in the *Padding Data to Required Message Length* section.

Required Data Point Parameters

Parameter	Description	Range	Default
PGN	The J1939 PGN associated with this data point. If this is an input data point, the data from messages received with this PGN will be transferred into the Input buffer. If this is an output data point, a message with this PGN will be built and transmitted using data from the Output buffer.	Valid J1939 PGN	
Position	The offset position in the message data where the data point begins. This is the location where data will be transferred in or out of the message buffer. The offset is displayed and entered in 'byte.bit' format with bytes and bits being 0 offset. i.e. The first bit in the message is at position 0.0.	Byte 0-1784 Bit 0-7	
Length (bits)	The amount of the data in bits to be transferred in or out of the message data. This field and Length (bytes.bits) are the same value with different ways of displaying and entering. If one is changed the other will update.		
Length (bytes.bits)	The amount of the data in bits to be transferred in or out of the message data. The offset is displayed and entered in 'byte.bit' format to indicate the number of full 8-bit bytes plus the number of bits beyond the full bytes. This field and Length (bits) are the same value with different ways of displaying and entering. If one is changed the other will update.		

Parameter	Description	Range	Default
Target Address	The J1939 network address associated with the data point. If this is an input data point, messages received must match both the PGN and address to be used for this data point. If the Target Address is set to 255, any message with a matching PGN, regardless of source address will be accepted. If this is an output data point, the destination address of the transmitted message will be set to the Target Address. The message will be broadcast if the Target Address is set to 255. Note that PDU type 2 messages are broadcast by definition and the Target Address will be ignored in those cases.	0-253, 255	255
Priority	The J1939 message priority to be used when transmitting this message. If this is an output data point, this is the message priority that will be used when the message is transmitted on the J1939 network. A lower numeric value is a higher priority. Care should be taken to not set the priority to a value that could impact other control messages on the J1939 network. This value is generally set to the default of 6. If this is an input data point, this value is ignored. J1939 messages are screened by PGN and target address; the message priority is ignored.	0-7	6

Parameter	Description	Range	Default
Update Rate	The desired update rate for the data point in milliseconds. If this is an input data point, the data point is expected to be updated (a message received with a matching PGN and address) within the configured Update Rate. If no update is received within the configured time, the module will request the data point's PGN by transmitting a Request PGN to the Target Address. If the Update Rate is set to 0, the PGN will never be requested. A message timeout indication is provided for input data points when using a non-zero Update Rate. If the Update Rate is non-zero, and no message is received after the update period, any data associated with the data point in the Input buffer is set to 0xFF. If this is an output data point, the associated message will be transmitted at the configured Update Rate. If the Update Rate is set to 0, the message will only be transmitted when a Request PGN is received for the configured PGN.	0 – 65535	0
Table Address	The offset into the I/O Table buffer where the data associated with the data point is to be located. If this is an input data point the offset is into the Input buffer. If this is an output data point the offset is into the Output buffer. The Table Address is set by selecting an available address from the Table Address list. See the *Locating the Data Point in the I/O Buffer* section above for complete details.	Available offsets in the I/O buffer up to the configured I/O buffer size	First available offset in the I/O buffer

Table 5. Required Data Point Parameters

Optional Data Point Parameters

The optional parameters are labels and descriptions used to document the data points in the configuration. They are not required for operation and may be left blank.

Parameter	Description	Range	Default
PGN Acronym	Short label identifying the PGN message. If an entry is selected from the PGN Reference Table this will be populated with the acronym assigned in the J1939 Specification.	Any alpha-numeric string	Blank
PGN Label	Long label identifying the PGN message. If an entry is selected from the PGN Reference Table this will be populated with the descriptive label assigned in the J1939 Specification.	Any alpha-numeric string	Blank
SPN	The SPN number associated with the data within the PGN message. If an entry is selected from the PGN Reference Table this will be populated with the SPN number assigned in the J1939 Specification.	Numeric string	Blank
SPN Name	The label describing the SPN associated with the data within the PGN message. If an entry is selected from the PGN Reference Table this will be populated with the SPN label assigned in the J1939 Specification.	Any alpha-numeric string	Blank
Description	User entered description or comment for the data point.	Any alpha-numeric string	Blank

Table 6. Optional Data Point Parameters

DTC Table Data Point Configuration

The BridgeWay can monitor Active Diagnostics (DM1) and Previously Active Diagnostics (DM2) messages sent by devices on the J1939 network. When DTC table data points are added to the Input buffer configuration, the J1939 DTC dialog is used to configure the data point.

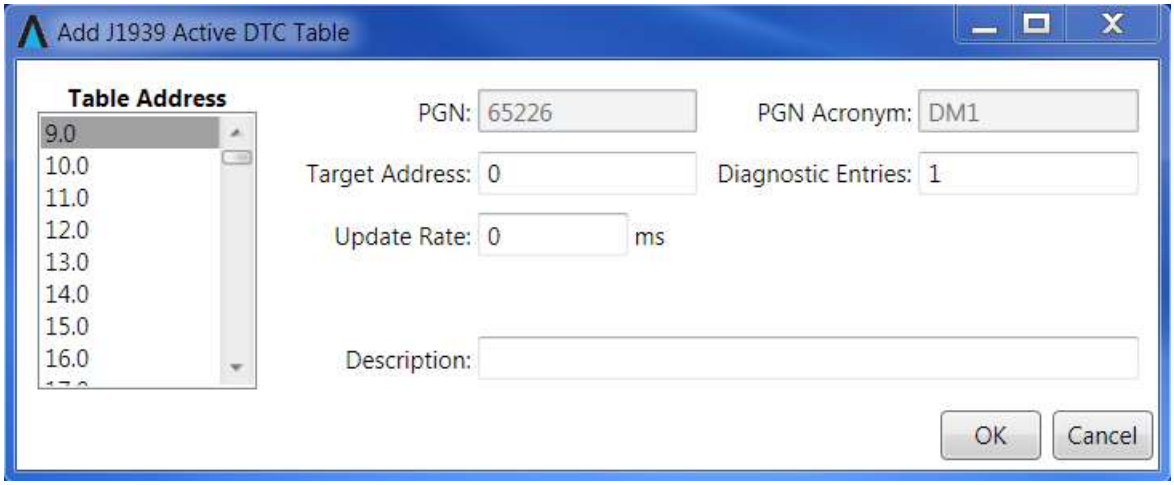

Figure 19. BWConfig J1939 DTC dialog

Parameter	Description	Range	Default
PGN	(Display only) The J1939 PGN associated with this data point. This will automatically be set to either 65226 for Active or 65227 for Previously Active.	65226 65227	
PGN Acronym	(Display only) Short label identifying the PGN message. This will automatically be set to either DM1 for Active or DM2 for Previously Active.	DM1 DM2	
Target Address	The J1939 network address from which this data point is to monitor diagnostics.	0-253	0

Parameter	Description	Range	Default
Diagnostic Entries	The number of diagnostic entries this table can hold. This will be the maximum number of DTC entries that can be placed into the table. If the received J1939 diagnostic message contains more diagnostics than fit in the table, only those that fit will be transferred to the Input buffer, and the high bit in the table header will be set to indicate that the table has overflowed. Each diagnostic entry requires 4 bytes of Input buffer space. The total space occupied in the Input buffer will be (Entries x 4) + 2 bytes. See the *Diagnostic Table Format* section for details on the format of the diagnostic entries in the Input buffer.	1-128	1
Update Rate	The desired update rate for the data point in milliseconds. The data point is expected to be updated (a matching DM message received from the target address) within the configured Update Rate. If no update is received within the configured time, the module will request the DM message by transmitting a Request PGN to the Target Address. If the Update Rate is set to 0, the DM message will never be requested. A message timeout indication is provided when using a non-zero Update Rate. If the Update Rate is non-zero, and no DM message is received after the update period, any DTC table data in the Input buffer is set to 0xFF.	0 – 65535	0

Parameter	Description	Range	Default
Table Address	The offset into the Input buffer where the data associated with the DTC table is to be located. The Table Address is set by selecting an available address from the Table Address list. See the *Locating the Data Point in the I/O Buffer* section above for complete details.	Available offsets in the I/O buffer up to the configured I/O buffer size	First available offset in the I/O buffer
Description	User entered description or comment for the data point.	Any alpha-numeric string	Blank

Table 7. DTC Table Data Point Parameters

The layout of the DTC table data in the Input buffer is described in the *Diagnostic Table Format* section.

Common Parameters Workspace Option

When a new configuration workspace is created, the New submenu provides the option to create a Standard or Common Parameters configuration. The Common Parameters configuration is automatically populated with a set of standard J1939 SPNs that are commonly monitored on a J1939 network. This allows a BridgeWay to be configured very quickly for common monitoring applications.

The Common Parameter configuration is configured with an Input buffer data size of INT(16-bit). Each pre-configured SPN is located on a 16-bit word boundary for easy parsing of the input data at the PLC.

The following input buffer layout is pre-configured when selecting the Common Parameters configuration.

Input Buffer Word Location	SPN	SPN Name
2	92	Engine Percent Load at Current Speed
3	190	Engine Speed
4	513	Actual Engine Percent Torque
5	975	Engine Fan 1 Estimated Percent Speed
6	247	Engine Total Hours of Operation
8	250	Engine Total Fuel Used
10	110	Engine Coolant Temperature
11	174	Engine Fuel Temperature 1
12	175	Engine Oil Temperature 1
13	52	Engine Intercooler Temperature
14	98	Engine Oil Level
15	111	Engine Coolant Level 1
16	94	Engine Fuel Delivery Pressure
17	100	Engine Oil Pressure

Input Buffer Word Location	SPN	SPN Name
18	109	Engine Coolant Pressure 1
19	51	Engine Throttle Position 1
20	183	Engine Fuel Rate
21	108	Barometric Pressure
22	171	Ambient Air Temperature
23	172	Engine Intake Air Temperature
24	102	Engine Intake Manifold 1 Pressure
25	105	Engine Intake Manifold 1 Temperature
26	107	Engine Air Filter 1 Differential Pressure
27	173	Engine Exhaust Temperature
28	168	Battery Potential / Power Input 1
29	158	Key switch Battery Potential
30	127	Transmission Oil Pressure
31	177	Transmission Oil Temperature 1
32	97	Water in Fuel Indicator 1

Table 8. Common Parameter Configuration SPN Input Data Point Configuration

Example Applications

Read and Write PGN and Diagnostic Data

Application Description

A system controller (PLC) on Ethernet requires some data that is collected by an ECU and produced on J1939. There is also a piece of data that is determined by the system controller that would be beneficial for some of the ECUs that are on the J1939 network. Additionally, the active diagnostics for an ECU should be monitored by the controller.

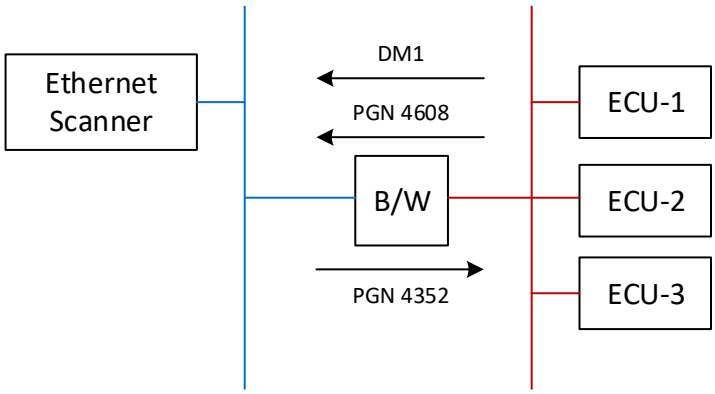

Figure 20. Example Application Network Diagram

The data required by the system controller is contained in the PGN 4608 message as 2 12-bit values. The values are packed into the first 3 bytes of the message as shown below.

Bit Byte	7	6	5	4	3	2	1	0
0	Value #1 bits 0-7							
1	Value #2 bits 0-3				Value #1 bits 8-11			
2	Value #2 bits 4-11							

Table 9. Example PGN 4608 Message Data Format

The data from the system controller is to be produced using PGN 4352. The data is a 16-bit value and will be placed into the first 2 bytes of the message data.

BridgeWay Configuration

Ethernet Network Configuration for EtherNet/IP

The Ethernet network configuration is set to auto-negotiate speed and duplex and retrieve the IP configuration from a DHCP server. EtherNet/IP is the enabled protocol. All other network parameters are at the default settings.

Figure 21. Example EtherNet/IP Network Configuration

Ethernet Network Configuration for Modbus TCP

The Ethernet network configuration is set to auto-negotiate speed and duplex and retrieve the IP configuration from a DHCP server. Modbus TCP is the enabled protocol and byte swapping is enabled to make data access easy at the controller. All other network parameters are at the default settings.

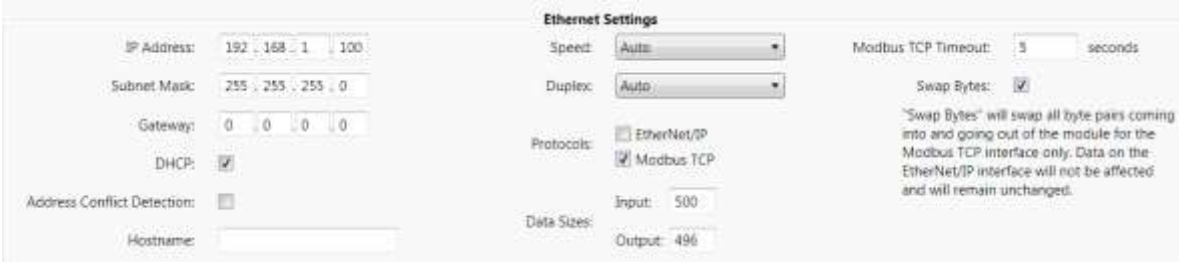

Figure 22. Example Modbus TCP Network Configuration

J1939 Network Configuration

All J1939 network parameters are left at the default settings.

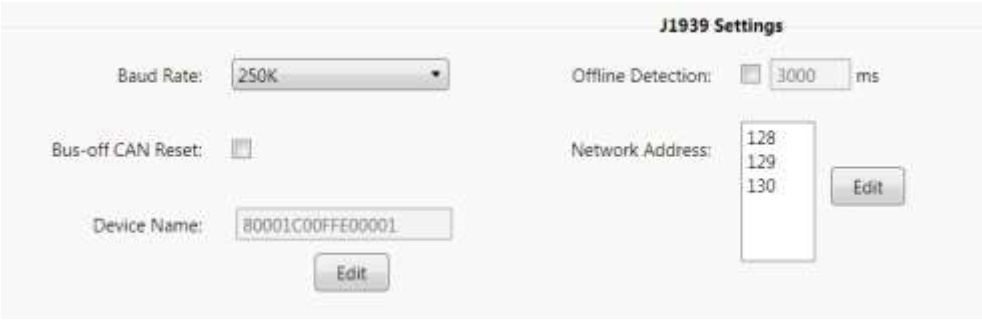

Figure 23. Example J1939 Network Configuration

Input Data Point Configuration

The input data points are responsible for determining where in the I/O Table Input buffer the data received from J1939 devices is to be placed.

It is desirable to be able to address the 2 values in our example as individual 16-bit words in the EtherNet/IP data. Since the values are packed into 3 bytes in the J1939 message, they need to be parsed out into 2 word locations in the Input buffer.

The diagnostic table will be located 100 bytes into the Input buffer and contain up to 20 diagnostic entries.

The resulting J1939 Input Data Point configuration from BWConfig is shown below.

Interfaces | J1939 Input Points | J1939 Output Points

Input Size: 500 bytes Data Size: INT (16-bit) Align New Points On Register Boundary: ☑

Table Address	PGN	PGN Label	PGN Position (byte.bit)	Data Bits	Data Bytes. Bits	Update Rate	Target Address	PGN Acronym	SPN	SPN Name	Description
0.0			0.0	32	4.0						Reserved for status register
2.0	4608		0.0	12	1.4	0	255				Value #1
3.0	4608		1.4	12	1.4	0	255				Value #2
50.0	65226		0.0	656	82.0	0	0	DM1			ECU-1 Active DTC

Figure 24. Example Input Buffer Configuration

2 input data points have been defined, 1 for each value in the PGN 4608 message. The first data point copies the first value (12 bits starting at the beginning of the message) into the first word of the Input buffer. The second data point copies the second value (12 bits starting 12 bits into the message) into the second word of the Input buffer. Both data points monitor the network for messages with PGN 4608 and any source address (Target Address 255 specifies “don’t care” source address).

The diagnostic data point for the DM1 message was configured as shown below.

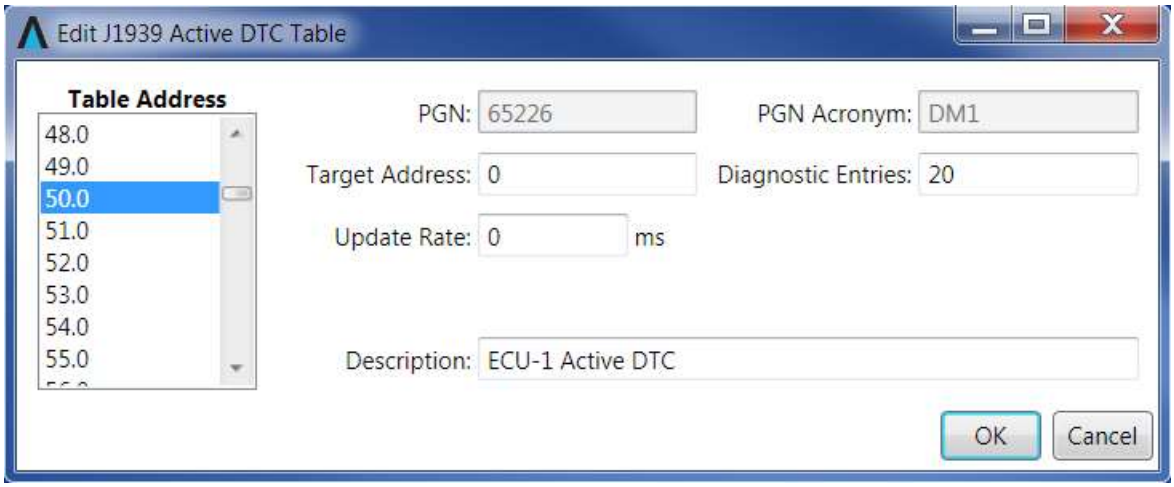

Figure 25. Example DTC Data Point Configuration

The table length has been set to 20 entries. The target address specifies that the DM1 messages from the ECM at address 1 are to be monitored by this data point. The diagnostic table will start at byte 100 (word 50) of the Input buffer.

Output Data Point Configuration

The output data points determine what PGNs are going to be produced by the BridgeWay on J1939, and what the content of those PGN messages is going to be.

The example application needs to produce 16 bits of data in a single PGN message. The resulting Output Data Point configuration is shown below.

Interfaces | J1939 Input Points | J1939 Output Points

Output Size: 496 bytes Register Size: INT (16-bit) Align New Points On Register Boundary:

Table Address	PGN	PGN Label	PGN Position (byte.bit)	Data Bits	Data Bytes. Bits	Update Rate	Priority	Target Address	PGN Acronym	SPN	SPN Name	Description
0.0			0.0	32	4.0							Reserved for command register
2.0	4352		0.0	16	2.0	100	6	255				Produced Value

Figure 26. Example Output Buffer Configuration

The single data point specifies that 2 bytes of data in the first word of the Output buffer is going to be copied into the first 2 bytes of the message. The message will be transmitted with a PGN of 4352 and a priority of 6 every 100ms. The message will be broadcast (Target Address 255) so that it can be seen by everyone on the network.

Padding Data to Required Message Length

The application requires PGN 4096 to be produced by the BridgeWay every 500ms. PGN 4096 is an 8 byte message holding 4 16-bit values with the following layout:

Bit Byte	7	6	5	4	3	2	1	0
0	Value #1 bits 0-7							
1	Value #1 bits 8-15							
2	Value #2 bits 0-7							
3	Value #2 bits 8-15							
4	Value #3 bits 0-7							
5	Value #3 bits 8-15							
6	Value #4 bits 0-7							
7	Value #4 bits 8-15							

Table 10. Example PGN 4096 Message Data Format

The application only requires data to be set in Value #1, Value #2, #3, and #4 should be defaulted to 0xFFFF.

Output Data Point Configuration

The example application needs to produce 16 bits of data for Value #1 in the PGN message. Although Value #1 is all the application requires, since the PGN message must be 8 bytes long, the output data points must be configured to pad the remaining 6 bytes of the message. Padding is accomplished by mapping a single output bit to the last bit of the message. The resulting Output Data Point configuration is shown below.

Interfaces | J1939 Input Points | J1939 Output Points

Output Size: 496 bytes Register Size: INT (16-bit) Align New Points On Register Boundary: ☑

Table Address	PGN	PGN Label	PGN Position (byte.bit)	Data Bits	Data Bytes. Bits	Update Rate	Priority	Target Address	PGN Acronym	SPN	SPN Name	Description
0.0			0.0	32	4.0							Reserved for command register
2.0	4096		0.0	16	2.0	500	6	255				Value #1
3.0	4096		7.7	1	0.1	500	6	255				last bit to pad out 8 bytes

Figure 27. Example Output Data Points with Message Padding

Value #1 is set by the word at offset 4 in the output buffer. A single bit at output buffer offset 6 is mapped to the last bit of the message which must be set to 1 by the PLC. The BridgeWay will fill the remaining unmapped bits of the message with 1's, effectively setting Values #2-#4 to 0xFFFF.

EtherNet/IP Interface

EtherNet/IP is based on the Common Industrial Protocol (CIP), which is also the application layer for DeviceNet and ControlNet, to exchange data between nodes.

Product Features

The BridgeWay supports EtherNet/IP Adapter Class functionality. Being an I/O Server, it can respond to requests for I/O messages but it does not generate such requests. The BridgeWay supports Message Server functionality. This means it can act as a target for explicit messaging.

CIP Objects

CIP makes use of abstract object modeling to describe the communications interface of a product. Objects are well defined subsets of a device's functionality. They have functions that they perform called Services and data variables called Attributes. If more than one copy of an object is needed each copy is called an Instance. The BridgeWay supports the objects required by the EtherNet/IP specification.

CIP Messaging

The regular or repeated transport of a specific set of data items is known as Implicit Messaging. Both parties agree in advance and allocate resources for the connection being used to transport the data as well as the transport rate and class. The connection ID within the Implicit message defines the meaning of the data. The term Implicit Messaging can be interchanged with the term I/O Messaging.

A one-time transport of a data item where both parties do not know in advance what's being transferred is known as Explicit Messaging. Explicit messaging is used for point to point, or request/response type messaging. The protocol of the message data describes (addresses) the data to be transferred. In object modeling the address is in terms of class number, instance number, and attribute number.

Messages can be sent as Connected or Unconnected. With Connected Messaging device resources are reserved for data transfer and are dedicated and always available. Unconnected messaging provides a means for a device to send a request without establishing a connection prior to data transfer. This is accomplished through the UCMM or Unconnected Message Manager of the EtherNet/ IP protocol. With UCMM all objects are accessible.

All Explicit Messages have message data defined in a format called the Message Router Protocol Data Unit (MR_PDU). There are Requests and Responses.

The MR_PDU Request format includes a Service code, Path Size, Path, and data, if any, for the Service. The Path is an encoded series of bytes or Segments describing the location of

the data item involved in the transfer. The Logical Segment is most often used. It describes the Class, Instance, and Attribute of the data.

The BridgeWay will handle up to 8 concurrent unconnected transactions. Up to 6 class 3 (messaging) connections are supported.

I/O Messaging

The BridgeWay allows an EtherNet/IP Scanner access to the I/O Table. The data received from the J1939 network is collected in the Input buffer (IN) of the BridgeWay and becomes the EtherNet/IP Input data to the EtherNet/IP Scanner. EtherNet/IP Output data from the scanner is stored in the BridgeWay's Output buffer (OUT) and transmitted on the J1939 network.

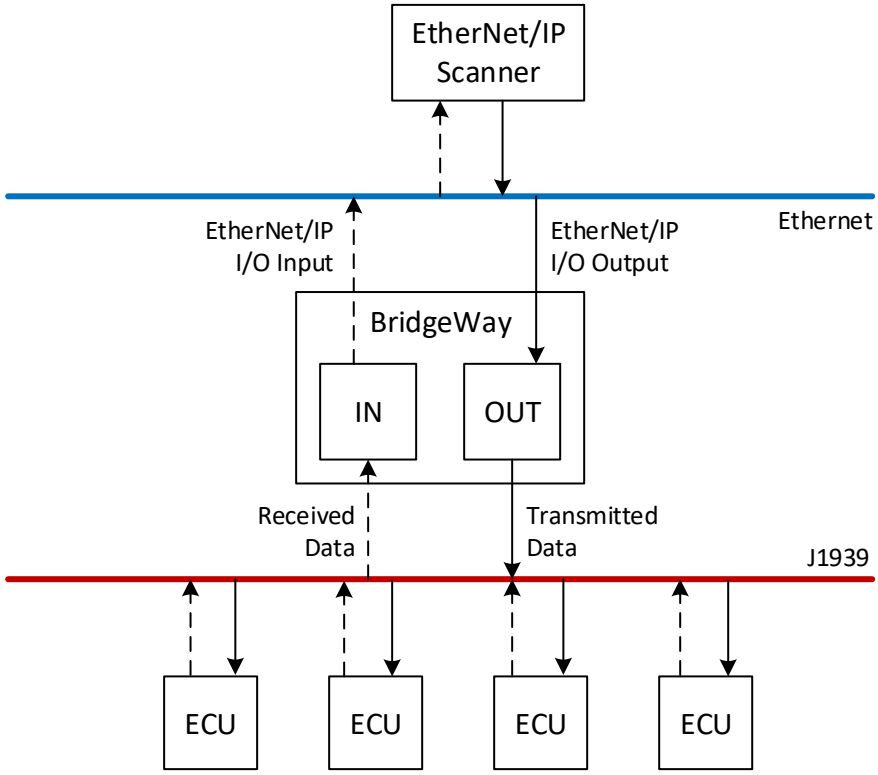

Figure 28. BridgeWay I/O Transfer with EtherNet/IP

Assembly Objects and Connections

Assembly Instances

There are 3 Assembly Object instances accessible from EtherNet/IP: input, output, and status. The input and output assemblies are linked to the Input and Output buffers. The status assembly provides status information about the BridgeWay.

The assembly instances associated with these 3 assemblies are listed below.

Assembly Instance	Description	Size in Bytes
100	Input	500 max
101	Status	12
150	Output	496 max

Table 11. EtherNet/IP Assembly Instances

Connection Points

Class 1 connections can be established to these assemblies using the following connection points.

Conn Point	Description	Size in Bytes	Use
198	Input-Only Heartbeat	0	Output connection point for input-only connections.
199	Listen-Only Heartbeat	0	Output connection point for listen-only connections.
100	Input	4-500	Input connection point.
101	Status	12	Input connection point.
150	Output	8-500	Output connection point.

Table 12. EtherNet/IP Connection Points

The Input connection size is the Input Data Size configured in the Ethernet Network configuration.

The Output connection size is the Output Data Size configured in the Ethernet Network configuration plus 4 bytes for the Run/Idle header.

Input Assembly Format

The input assembly contains a 32-bit status register followed by the J1939 input data.

Byte Offset	Size in Bytes	Description
0	4	Status register.
4	Up to 496	J1939 device input data.

Table 13. EtherNet/IP Input Assembly Format

The J1939 device input data format and content is determined by the input data point configuration from the J1939 Input Data Points tab in BWConfig. The data appears in the table as it is mapped from the J1939 messages.

The status register is a bit string with the following bit definitions.

Bit	Description
0	BridgeWay is in Run mode. (Cleared if in Idle mode.)
1	BridgeWay is online on the J1939 network.
2	J1939 network interface fault.
3-31	Not used.

Table 14. EtherNet/IP Input Status Register Bit Definitions

Output Assembly

The output assembly contains a 32-bit command register followed by the J1939 device output data.

Byte Offset	Size in Bytes	Description
0	4	Command register.
4	Up to 492	J1939 device output data.

Table 15. EtherNet/IP Output Assembly Format

The J1939 device output data format and content is determined by the output data point configuration from the J1939 Output Data Points tab in BWConfig. The data appears in the table as it is mapped to the J1939 messages.

Note: EtherNet/IP I/O connections append a 32-bit Run/Idle header at the front of the output data. The actual output data transferred in the I/O connection includes this extra 4 bytes at the front of the output assembly described above. The header adds 4 bytes to the connection size but is hidden from the user in both the BridgeWay and the EtherNet/IP controller.

The Command register is a bit string with the following bit definitions.

Bit	Description
0	Local Run Mode. See the *Run/Idle Control* section for details.
1	Reset Faults. Resets the J1939 network interface faults.
2-3	Reserved
4	Reset Module Resets the BridgeWay module.
5	CAN Reset Resets the J1939 CAN interface.
6-31	Not used.

Table 16. EtherNet/IP Output Command Register Bit Definitions

Status Assembly

The status assembly is a collection of status and diagnostic information for the BridgeWay J1939 interface. The information in the assembly is updated once a second.

Note: All information in the status assembly is stored in little endian format. The least significant byte of multi-byte values is stored first.

Byte Offset	Size in Bytes	Data Type	Name	Description
0	2	UINT	J1939 Interface Status	The status of the J1939 interface. The following values are defined: 0 Offline 1 Online 2 Initializing
2	2	16-bit bit string	J1939 Interface Faults	The fault status of the J1939 interface. See the bit definitions below.
4	2	UINT	CAN Error Counter	The number of CAN errors that have been accumulated. This counter is reset by the fault reset
6	2	UINT	CAN Bus-Off Counter	The number of CAN bus-off errors that have occurred. This counter is reset by the fault reset command
8	2	UINT	CAN Overrun Counter	The number of CAN receive overrun errors that have occurred. This counter is reset by the fault
10	2	N/A	Reserved	Reserved

Table 17. EtherNet/IP Status Assembly Format

The J1939 Interface Faults word in the Status Assembly is a bit string with the following bit definitions.

Bit	Description
0	Address Claim Failed. The module was unable to claim the configured address and go online.
1	CAN Network Warning. The CAN controller has detected a large number of CAN errors. This is a sticky bit; it will not be cleared until a Clear Fault command has been issued.
2	CAN Bus-Off. The CAN interface is currently bus- off. This is a sticky bit; it will not be cleared until a Clear Fault command has been issued.
3	CAN Data Overrun. The CAN controller has detected a receive packet overrun. This is a sticky bit; it will not be cleared until a Clear Fault command has been issued.
4	J1939 Transport Protocol Error. The protocol stack has detected an error with a transport protocol (large fragmented) message. This is a sticky bit; it will not be cleared until a Clear Fault command has been issued.
5	J1939 Receive Queue Overflow. The J1939 receive queue has overflowed. This is a sticky bit; it will not be cleared until a Clear Fault command has been issued.
6	J1939 Transmit Queue Overflow. The J1939 transmit queue has overflowed. This is a sticky bit; it will not be cleared until a Clear Fault command has been issued.
7-15	Not used.

Table 18. Status Assembly J1939 Interface Faults Bit Definitions

Run/Idle Control

The Run/Idle mode of the BridgeWay determines whether the module can actively transmit messages on the J1939 network. In Idle mode, the module only monitors messages and does not transmit.

Run/Idle Control with I/O Connection

Run/Idle mode is controlled by the EtherNet/IP controller through an I/O connection using 2 bits in the output data: bit 0 in the Run/Idle Header and bit 0 in the Command Register.

Both bits must be set to put the BridgeWay in Run mode. If either of the 2 bits is cleared the BridgeWay will revert to Idle mode.

Note that the Run/Idle Header bit is not directly accessible in most controllers. The Run mode bit in the Run/Idle Header is controlled by the Run/Program mode of the controller. When the controller is put into Run mode, the bit is set in the Run/Idle header.

Run/Idle Control with Explicit Messages

If I/O connections are not being used, the Run/Idle mode of the BridgeWay may be controlled though explicit writes to the Output assembly.

If bit 0 of the Command register is set when the Output assembly is written, the module will be put into Run mode. The module will remain in Run mode until an Output assembly write is made with the bit cleared.

If an I/O connection is active, explicit writes to the Output assembly are rejected, and the Run/Idle mode is controlled by the bit status in the connection output data.

Interaction with Modbus TCP

If both EtherNet/IP and Modbus TCP are enabled in the EtherNet Network configuration, the BridgeWay will support messages on either protocol and will support requests simultaneously.

If an EtherNet/IP I/O connection is active, Modbus TCP requests are limited to monitor-only. Any write requests made on Modbus will be rejected while an EtherNet/IP I/O connection is active.

If all communication with the module is done via explicit messages on EtherNet/IP, all writes to the output data from either protocol will be accepted. The output data will be set to the latest write received regardless of protocol type.

I/O Data Summary

The following diagram illustrates how the various components of the Input buffer are used to create the input assembly and connection data accessible from EtherNet/IP.

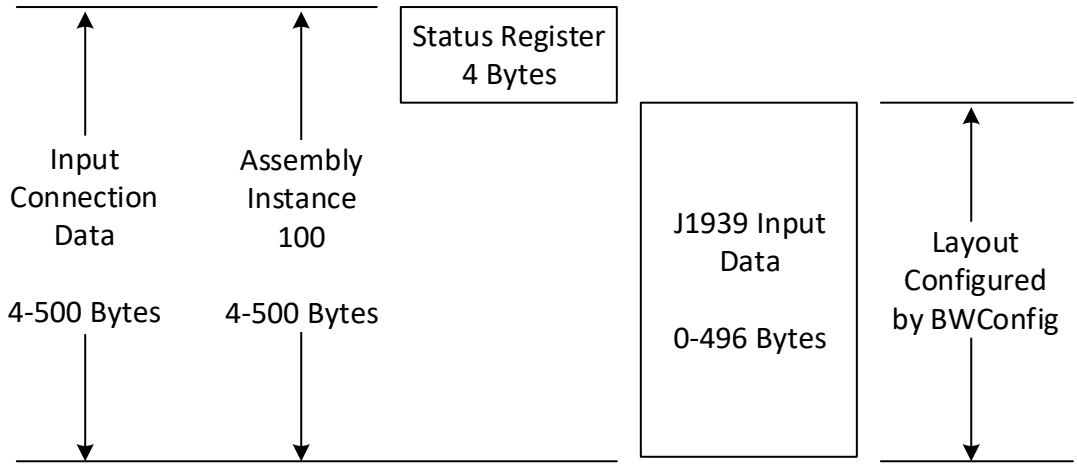

Figure 29. EtherNet/IP Input Data Summary

The following diagram illustrates how the various components of the Output buffer are used to create the output assembly and connection data accessible from EtherNet/IP.

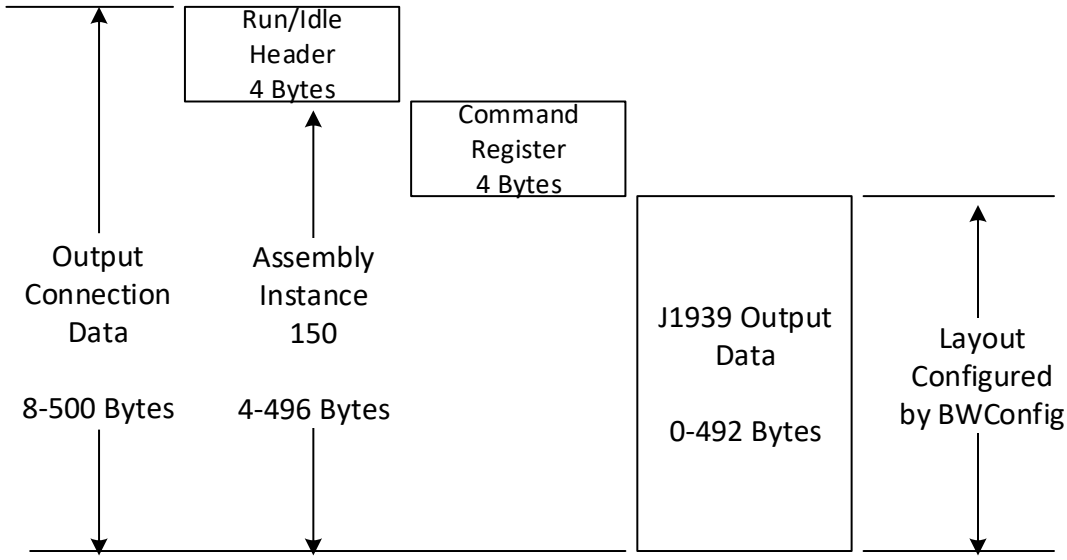

Figure 30. EtherNet/IP Output Data Summary

Using ControlLogix with the BridgeWay

When configuring I/O connections between a Rockwell Automation ControlLogix EtherNet/IP scanner and the BridgeWay, the Generic EtherNet/IP device type should be used.

The Run/Idle register is automatically inserted at the front of the output data and the application has no control over its use. The System Run Mode bit in the header is set according to the Run/Program mode of the controller.

The connection output size in the RSLogix configuration must be set to the Output Data Size configured in the Ethernet Network configuration in BWConfig, which defaults to 496 bytes. (Although the Run/ Idle header adds 4 bytes to the actual connection size, it automatically added by the controller and does not come into play in this size). The connection input size must be set to the Input Data Size configured in the Ethernet Network configuration in BWConfig, which defaults to 500 bytes.

The status assembly may also be monitored by configuring the connection in RSLogix with a “with status” Comm Format. The status size is 12 bytes.

The status output in the RsLogix connection must be set to the Input Only heartbeat connection point of 198.

The BridgeWay does not support a configuration assembly. The configuration instance in the RSLogix connection configuration may be set to any number since it will be ignored. Set the configuration size to 0.

The figure below shows a typical ControlLogix device configuration.

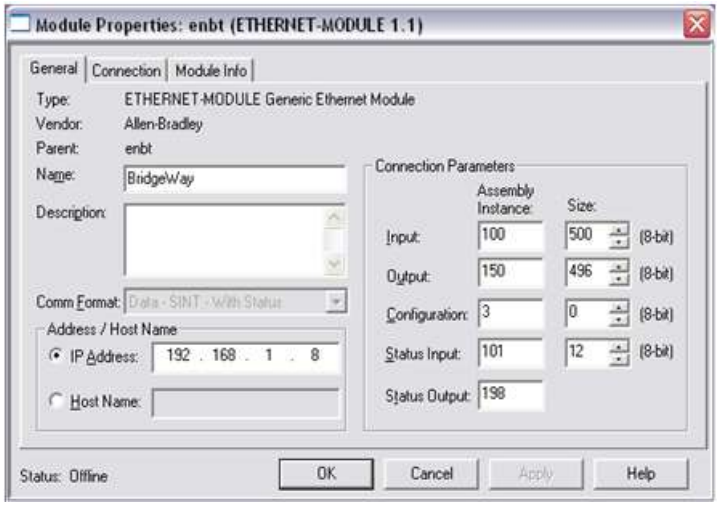

Figure 31. ControlLogix Connection Configuration

Modbus TCP Interface

The BridgeWay implementation of the Modbus TCP server is done according to the Modbus TCP specification 1.0.

The module can handle 4 simultaneous connections.

Supported Modbus Commands

The following Modbus TCP commands are supported by the BridgeWay.

Function Code	Function Name
1	Read Coils
2	Read Input Discrete
3	Read Holding Registers
4	Read Input Registers
5	Force Single Coil
6	Write Single Register
15	Force Multiple Coils
16	Write Multiple Registers
22	Mask Write Registers

Table 19. Supported Modbus Commands

Supported Modbus Exception Codes

An exception code is returned in the Modbus response when the BridgeWay is unable to service the Modbus request that was received. The following exception codes are used by the BridgeWay.

Exception Code	Name	Description
01	Illegal Function	The BridgeWay does not support the function code requested
02	Illegal Data address	The register address received in the request is outside the allowed I/O Table range
03	Illegal Data Value	The data in the request is invalid

Table 20. Supported Modbus Exception Codes

Modbus TCP Register Addressing

The BridgeWay Input and Output buffers in the I/O Table and the status assembly are mapped to ranges of Modbus register addresses.

Modbus Register 101

There are 4 types of Modbus registers:

Coils	Output bits. Coils are used to address the output buffer in the I/O Table at the bit level.
Input Status Bits	Input bits. Input Status bits are used to address the input buffer in the I/O Table or the status assembly at the bit level.
Input Registers	Input words. Input Registers are used to address the input buffer in the I/O Table or the status assembly at the 16-bit word level.
Holding Registers	Output words. Holding Registers are used to address the output buffer in the I/O Table at the 16-bit word level.

Register addresses are 1's offset. The first location in the I/O area is addressed as register 1.

Bit registers are mapped most significant bit first. Hence register 1 corresponds to bit 15 of the first 16-bit word.

Depending on the application, controller or configuration software, Modbus register addresses are depicted in several different ways to specify the type of register.

- The type of register is specified with the register number.
- The Modicon Convention uses a prefix on the number to specify the type of register, followed by a 4 digit register number.
- The Extended Modicon Convention uses a 5 digit register number after the prefix to allow for a larger register range.

	Modicon Addresses	Extended Modicon Addresses
Coils	00001 – 09999	000001 – 065535
Input Status Bits	10001 – 19999	100001 – 165535
Input Registers	30001 – 39999	300001 – 365535
Holding Registers	40001 – 49999	400001 – 465535

Table 21. Modbus Register Addressing Schemes

Input Buffer Addressing

Starting Input Register: 1 (30001 or 300001 also 40001 or 400001)
Register Count: up to 1024

Starting Input Status Bit: 1 (10001 or 100001 also 000001)
Bit Count: up to 16384

Note: Input data may also be read using Holding Register or Coil functions in the same register range.

The full range is dependent on the Input Data Size configured in the Ethernet Network configuration.

Input Register	Input Status Bit Address									
	15	**14**	**13**	**12**	**11**	**10**	**9**	**...**	**1**	**0**
1	1	2	3	4	5	6	7	...	15	16
2	17	18	19	20	21	22	23	...	31	32
.....										
1024	16369	16370	16371	16372	16373	16374	16375	...	16383	16384

Table 22. Modbus Addressing for Input Buffer

Output Buffer Addressing

Starting Holding Register: 1027 (41027 or 401027)
Register Count: up to 1024

Starting Coil: 16417 (016417)
Coil Count: up to 16384

The full range is dependent on the Output Data Size configured in the Ethernet Network configuration.

Note: The Legacy BridgeWay Modbus TCP interface started the Output Register addresses at 1025, but included the equivalent of the EtherNet/IP Run/Idle Header. Current BridgeWay's do not support the extra Run/Idle Header in the Modbus output data. Holding Registers 1025 and 1026 (41025 and 41026) are supported to maintain backward compatibility but serve no functional purpose.

Holding Register	Coil Bit Address									
	15	**14**	**13**	**12**	**11**	**10**	**9**	**...**	**1**	**0**
1027	16417	16418	16419	16420	16421	16422	16423	...	16431	16432
1028	16433	16434	16435	16436	16437	16438	16439	...	16447	16448
...										
2050	32785	32786	32787	32788	32789	32790	32791	...	32799	32800

Table 23. Modbus Addressing for Output Buffer

Status Addressing

Starting Input Register: 2051 (32051 or 302051 also 42051 or 402051)
Register Count: 6

Starting Input Status Bit: 32801 (132801 also 032801)
Bit Count: 96

Note: Status data may also be read using Holding Register or Coil functions in the same register range.

Input Register	Input Status Bit Address									
	15	**14**	**13**	**12**	**11**	**10**	**9**	**...**	**1**	**0**
2051	32801	32802	32803	32804	32805	32806	32807	...	32815	32816
2052	32817	32818	32819	32820	32821	32822	32823	...	32831	32832
...										
2056	32881	32882	32883	32884	32885	32886	32887	...	32895	32896

Table 24. Modbus Addressing for Status Data

Modbus Addressing Examples

Word Addressing Examples

- Input buffer word 0 — Input Register 1, 30001, or 300001 or Holding Register 1, 40001, or 400001
- Input buffer word 10 — Input Register 11, 30011, 300011 or Holding Register 11, 40011, 400011
- Output buffer word 0 — Holding Register 1027, 41027, or 401027
- Output buffer word 100 — Holding Register 1127, 41127, or 401127

Bit Addressing Examples

- Input buffer bit 0 — Input Status bit 16, 10016, or 100016
- Input buffer bit 15 — Input Status bit 1, 10001, or 100001
- Output buffer bit 0 — Coil 16432 or 016432
- Output Table bit 15 — Coil 16417 or 016417

Register Data Content

Input Data

The input data contains a 32-bit status register followed by the J1939 device input data.

Modbus Input Register	Register Count	Description
1	2	Status register
3	Up to 1022	J1939 device input data

Table 25. Modbus TCP Input Data Format

The J1939 device input data format and content is determined by the input data point configuration from the J1939 Input Data Points tab in BWConfig. The data appears in the table as it is mapped from the J1939 messages.

The status register is a bit string with the following bit definitions.

Bit	Description
0	BridgeWay is in Run mode. (Cleared if in Idle mode.)
1	BridgeWay is online on the J1939 network.
2	J1939 network interface fault.
3-31	Not used.

Table 26. Modbus TCP Input Status Register Bit Definitions

Output Data

The output data contains a 32-bit command register followed by the J1939 device output data.

Modbus Holding Register	Register Count	Description
1025	2	Legacy Run/Idle Register **Note:** Writes to these registers are ignored
1027	2	Command register
1029	Up to 1022	J1939 device output data

Table 27. Modbus TCP Output Data Format

The J1939 device output data format and content is determined by the output data point configuration from the J1939 Output Data Points tab in BWConfig. The data appears in the table as it is mapped to the J1939 messages.

The Command register is a bit string with the following bit definitions.

Bit	Description
0	Local Run Mode. See the *Run/Idle Control* section for details.
1	Reset Faults. Resets the J1939 network interface faults.
2-31	Not used.

Table 28. Modbus TCP Output Command Register Bit Definitions

Status Data

The status data table is a collection of status and diagnostic information for the BridgeWay J1939 interface. The information in the assembly is updated once a second.

Modbus Input Register	Register Count	Name	Description
2051	1	J1939 Interface Status	The status of the J1939 interface. The following values are defined: 0 Offline 1 Online 2 Initializing
2052	1	J1939 Interface Faults	The current fault status of the J1939 interface. See the bit definitions below.
2053	1	CAN Error Counter	The number of CAN errors that have been accumulated. This counter is reset by the fault reset command bit.
2054	1	CAN Bus-Off Counter	The number of CAN bus-off errors that have occurred. This counter is reset by the fault reset command bit.
2055	1	CAN Overrun Counter	The number of CAN receive overrun errors that have occurred. This counter is reset by the fault reset command bit.
2056	1	Reserved	

Table 29. Modbus TCP Status Data Format

The J1939 Interface Faults word in the Status data is a bit string with the following bit definitions.

Bit	Description
0	Address Claim Failed. The module was unable to claim the configured address and go online.
1	CAN Network Warning. The CAN controller has detected a large number of CAN errors. This is a sticky bit; it will not be cleared until a Clear Fault command has been issued.
2	CAN Bus-Off. The CAN interface is currently bus- off. This is a sticky bit; it will not be cleared until a Clear Fault command has been issued.
3	CAN Data Overrun. The CAN controller has detected a receive packet overrun. This is a sticky bit; it will not be cleared until a Clear Fault command has been issued.
4	J1939 Transport Protocol Error. The protocol stack has detected an error with a transport protocol (large fragmented) message. This is a sticky bit; it will not be cleared until a Clear Fault command has been issued.
5	J1939 Receive Queue Overflow. The J1939 receive queue has overflowed. This is a sticky bit; it will not be cleared until a Clear Fault command has been issued.
6	J1939 Transmit Queue Overflow. The J1939 transmit queue has overflowed. This is a sticky bit; it will not be cleared until a Clear Fault command has been issued.
7-15	Not used.

Table 30. Modbus TCP Status Data J1939 Interface Faults Bit Definitions

Run/Idle Control

The Run/Idle mode of the BridgeWay determines whether the module can actively transmit messages on the J1939 network. In Idle mode, the module only monitors messages and does not transmit.

If bit 0 of the Command register (Holding register 1027) is set, the module will be put into Run mode. The module will remain in Run mode if there is an active Modbus TCP connection and Holding register 1027 is not written with bit 0 cleared.

If the Modbus TCP connection is closed, the module will immediately change to Idle mode.

If no Modbus requests are received within the configured Modbus TCP Timeout period, the module will change to Idle mode.

Interaction with EtherNet/IP

See the *Interaction with Modbus TCP* section for details.

I/O Data Summary

The following diagram illustrates how the various components of the Input buffer are used to create the input data accessible from Modbus TCP.

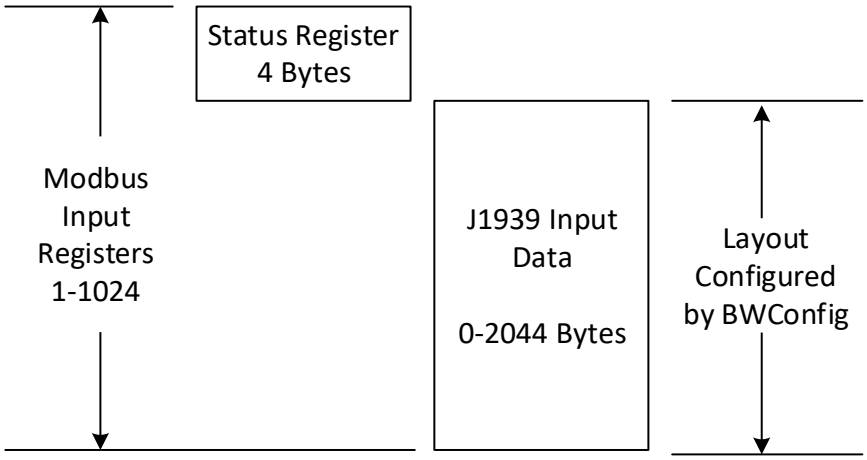

Figure 32. Modbus TCP Input Data Summary

The following diagram illustrates how the various components of the Output buffer are used to create the output data accessible from Modbus TCP.

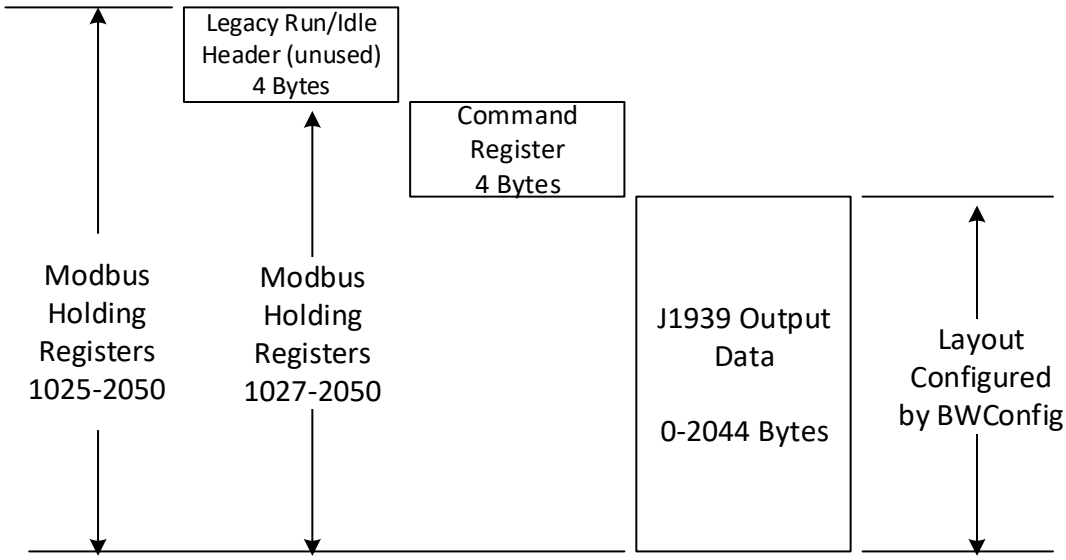

Figure 33. Modbus TCP Output Data Summary

I/O Data Endian Format

The BridgeWay transfers I/O data between Modbus TCP and J1939 without regard to data content or format. Due to this, the user is responsible for making sure that the devices on either network understand the format of the data.

J1939 is a little-endian protocol; values are transmitted least significant byte first. Hence, all data in the I/O Table is assumed, by the J1939 nodes, to be stored as little endian.

Modbus TCP is a big-endian protocol; values are transmitted most significant byte first.

The Swap I/O Bytes option in the Ethernet Network configuration will swap the bytes of each 16-bit word in the Input, Output, and Status data. This will aid in the transformation between the big and little-endian networks. However, care must be taken to assure that data is mapped to 16-bit word boundaries for this feature to be fully effective. It is recommended that the Data Size in the J1939 Input Points and Output Points tabs be set to INT (16-bit) to aid in the mapping.

J1939 Interface

Address Management

The BridgeWay address management is responsible for bringing the module online on the J1939 network with a unique network address in accordance to the J1939-81 specification. The address management will claim a configured address, if possible, and protect it against lower priority contending address claims. If a configured address is unable to be uniquely claimed or is lost due to a higher priority contending claim, the module will be taken offline.

This manual will not discuss the address management protocol in detail; readers should reference the J1939-81 specification for complete details. The scope of this section is to explain how the configuration of the address list affects address management.

Single Configured Address

If a single address is configured in the address list, the module will attempt to claim that address. If the configured address is successfully claimed, the module will join the J1939 network using that address. If the address cannot be claimed, the module remains offline.

Multiple Configured Addresses

If more than one address is configured in the address list, the module will attempt to claim addresses in the order they appear in the list until it is either successful, or it runs out of addresses. Once an address is successfully claimed, the module will join the J1939 network using that address. If an address cannot be claimed, the module moves to the next address in the list and attempts to claim that address. If no addresses in the list can be claimed, the module remains offline.

Address Loss

If the module loses its current network address to a higher priority contending address claim, it will cease all network activity using that address. If the address list is configured with a single address, the module will remain offline after an address loss. If the address list has multiple addresses, the module will attempt to claim the next address on the list. If no addresses in the list can be successfully claimed, the module will remain offline.

Request for Address Claimed

The BridgeWay will respond to a Request for the Address Claimed PGN (0x00EE00) sent both destination specific and broadcast. The response is dependent on the current address management state and is discussed below.

- If the module has successfully claimed an address and is online, the response will be an Address Claimed message with the current address.
- If the module is offline because it has lost its address to a higher priority claim and cannot successfully claim another address, the response will be a Cannot Claim Address message.
- If the module is in the process of attempting to claim an address, it will not respond to the request.
- If the module is offline because it has not yet attempted to claim an address, or the configured address is invalid, it will not respond to the request.

Communications Methods

The J1939 network interface supports reception and transmission of the following J1939 message types in accordance to the J1939-21 specification.

- PDU1 destination specific
- PDU1 broadcast
- PDU2 (broadcast)

Message Transmission

Messages are transmitted on the J1939 network according to the J1939 output data point configuration. Messages are assembled from data in the Output buffer and transmitted on a cyclic time basis, or in response to a request for the associated PGN.

Data Point to Message Relationship

All output data points with the same PGN and Target Address collectively define a single message to be transmitted on the network.

Message Assembly

Messages are assembled according to the output data points configured for the associated PGN and Target Address. Data is copied from the Output buffer to the message buffer based on the sizes and offsets of all output data points configured with the PGN and Target Address.

All bits in the message buffer that are not set by the Output buffer data (ranges in the message buffer that are not referenced by output data points) are set to 1.

The message length is set according to the size of the data point with the largest message offset. The length is rounded up to the nearest byte.

Note: Message length is strictly determined by the output data point configuration for a given message. The BridgeWay does not know the specified message length for all possible PGN's. The output data point configuration must provide a data point that will specify the end of the message to ensure that the correct length message is assembled.

Automatic Transmission

Messages are transmitted automatically based on the Update Time parameter in the output data points associated with the message. The smallest, non-zero Update Time of all data points associated with the message will be used.

If the Update Time is configured as 0, no automatic transmission will occur for the message. The only way that a message configured in this way will be transmitted is if a request is received for the associated PGN.

Automatic transmission for a message will occur Update Time milliseconds after the last transmission of the message, regardless of whether the last transmission was automatic or a response to a request PGN.

Handling Request PGNs

Requests received that reference a PGN configured in an output data point(s) will cause a message transmission of that message. The message will be assembled and transmitted immediately in response to the request, regardless of the timing of the automatic transmission.

Requests received that reference a PGN that is not configured in any output data point will cause a NAK response to be sent if the request was destination specific. Broadcast requests for non-configured PGNs are ignored.

Destination Addresses

The destination address used for message transmission is dependent on the associated output data point configuration or the request message, whichever caused the message to be sent. The rules for destination addressing follow.

- If the message PGN is a PDU2 type, all PDU2 messages are broadcast by definition.
- If the transmission is automatic and the Target Address set to 255, the message will be broadcast.
- If the transmission is automatic and the Target Address is not 255, the message transmission will be destination specific to the Target Address.
- If the transmission is due to a request and the request was destination specific, the message transmission will be destination specific to the source address of the request.
- If the transmission is due to a request and the request was broadcast, the message will be broadcast.

Message Priority

The priority of the message being transmitted is set to the priority configured in the output data point. By specification, the default priority of J1939 messages is 6.

Note: Care should be taken when changing the priority of messages to a value other than 6 as it may affect the performance of other traffic on the J1939 network.

Receiving Messages

Handled Messages

The following J1939 messages are handled by the BridgeWay when they are received from the network.

- Address Claimed messages are handled by address management. See *Address Management*.
- Request for Address Claimed messages are handled by address management. See *Address Management*.
- Request messages referencing PGNs configured in output data points trigger message transmission for the associated message. See *Message Transmission*.
- Messages with PGNs and source addresses matching configured input data points trigger an Input buffer update. See *Input Buffer Update* below.

Input Buffer Update

Messages received with a PGN and source address matching those configured for an input data point will be parsed according to the configured data points.

Input data points are combined based on configured PGN and Target Address. All input data points with matching PGN and Target Address are combined to define the handling for a single message.

If the Target Address is configured as 255, all incoming messages with a matching PGN will be parsed using the data point, regardless of source address. If the Target Address is not 255, received messages must match both the PGN and source address to be handled by the input data point. Received messages are handled by all input data points that meet these rules; a given message may be processed by more than one input data point.

If a received message passes an input data point's match test, the data from its message buffer is copied to the Input buffer according to the data point configuration. Data of the configured length is copied from the configured position in the message to the configured Input buffer offset.

Parameter Timeout Indication

Parameter timeout indication has been provided to allow the Modbus controller to determine if a device on the J1939 network has become inactive.

Input data points configured with a non-zero update rate will indicate a timeout when the associated message is not received within the configured update rate.

The timeout indication is all bits in input buffer for the input data point set to 1. This will affect all input data points associated with the PGN/Target Address. The result appears as if a message was received which contained 0xFF for all data bytes in the message.

Transport Protocol for Large Messages

The previous sections discussed message handling generically, ignoring message sizes. Messages with buffer sizes of 8 bytes or less can be directly sent and received on J1939 in a single message packet. However, messages with buffer sizes greater than 8 bytes must be fragmented, transmitted, and reassembled using the J1939 transport protocol. This section will not discuss the details of the transport protocol, readers should reference the J1939-21 specification; this document will provide a description of when and how the transport protocol is used by the BridgeWay.

Transmission of Large Messages

Messages larger than 8 bytes in length will be sent using transport protocol. If the destination address is 255, the message will be broadcast using BAM (Broadcast Announce Message) mechanisms. If the message is destination specific, a connection will be opened with the destination node and the message sent using RTS/ CTS (Request to Send/Clear to Send) mechanisms. For a complete discussion of BAM and RTS/CTS refer to the J1939-21 specification.

Reception of Large Messages

The BridgeWay will receive large messages that are broadcast using BAM or sent to the module using RTS/CTS. Once a complete message is received and reassembled, it is processed generically as described in the previous sections.

Limitations

The current implementation of the transport protocol in the BridgeWay is limited as described below.

- Only a single outgoing transport protocol session is active at a time, regardless of whether the message is transmitted using BAM or RTS/ CTS. Large messages are queued for transmission and transmitted in the order in which they are queued.
- The module supports up to 3 concurrent incoming transport protocol sessions. The concurrent sessions may be any mixture of BAM and RTS/ CTS sessions. Additional BAM sessions will be ignored and RTS connection requests will be denied once the limit is reached.

J1939 Diagnostic Messages

The DM1 (active diagnostics) and DM2 (previously active diagnostics) are the 2 most commonly used J1939 diagnostic messages. The BridgeWay includes support for these 2 message types.

Using BWConfig, the user can configure an active or previously active diagnostic table (or both) for a given J1939 device. The BridgeWay will update the tables in the Input buffer based on the contents of DM1 or DM2 messages received from the device.

This section will describe how the diagnostic tables are handled. See *DTC Table Data Point Configuration* for configuration details.

Diagnostic Table Format

The active and previously active diagnostic tables have the same format. The format consists of a table header followed by a list of DTC entries.

Table Header

The table header is a 16-bit word and provides an indication of the number of DTC entries that are currently in the table. It also contains the current J1939 lamp status for the monitored device. The table header content is described below.

Bits	Description
0-1	J1939 Protect lamp status.
2-3	J1939 Amber Warning lamp status.
4-5	J1939 Red Stop lamp status.
6-7	J1939 Malfunction lamp status.
8-14	Entry count. The current number of entries in the table.
15	Table overflow indication.

Table 31. J1939 Diagnostic Table Header Format

DTC Table Entries

Each entry in the DTC table contains information for a single diagnostic (J1939 SPN/FMI). Each table entry is 4 bytes with bit fields as described in the tables below.

The J1939 SPN value may be encoded differently in the diagnostic message received from the ECU. Due to an early vagueness in the J1939-73 specification, there is not a definite means to tell how the SPN is encoded. ECU's that follow the current specification will set the SPN Conversion Method flag to 0 and will encode the SPN value in a specific way. ECU's that follow the early specification will set the Conversion Method flag to 1; however, there are 3 ways that the SPN may be encoded in this case.

The BridgeWay provides the Conversion Method value in the DTC table entry. If the Conversion Method is set to 1, the user should refer to the ECU vendor to determine how the SPN is encoded.

The tables below describe the format of DTC table entry for each type of SPN encoding described in the J1939-73 specification.

SPN Conversion Method 0:

Word	Byte	Bits	Description
0	0	0-2	J1939 SPN bits 16-18.
		3-7	J1939 FMI.
	1	0-6	Occurrence count.
		7	SPN Conversion Method (set to 0)
1	2	0-7	J1939 SPN bits 0-7
	3	0-7	J1939 SPN bits 8-15

Table 32. DTC Table Entry Format for SPN Conversion Method 0

SPN Conversion Method 1 - Encoding version 1 - The least significant bits with the FMI and the upper 16 bits in Big Endian order.

Word	Byte	Bits	Description
0	0	0-2	J1939 SPN bits 0-2
		3-7	J1939 FMI.
	1	0-6	Occurrence count.
		7	SPN Conversion Method (set to 1)
1	2	0-7	J1939 SPN bits 11-18
	3	0-7	J1939 SPN bits 3-10

Table 33. DTC Table Entry Format for SPN Conversion Method 1, Version 1

SPN Conversion Method 1 - Encoding version 2 - The least significant bits with the FMI and the upper 16 bits in Little Endian order.

Word	Byte	Bits	Description
0	0	0-2	J1939 SPN bits 0-2
		3-7	J1939 FMI.
	1	0-6	Occurrence count.
		7	SPN Conversion Method (set to 0)
1	2	0-7	J1939 SPN bits 3-10
	3	0-7	J1939 SPN bits 11-18

Table 34. DTC Table Entry Format for SPN Conversion Method 1, Version 2

SPN Conversion Method 1 - Encoding version 3 - The most significant bits with the FMI and the lower 16 bits in Little Endian order.

Word	Byte	Bits	Description
0	0	0-2	J1939 SPN bits 16-18.
		3-7	J1939 FMI.
	1	0-6	Occurrence count.
		7	SPN Conversion Method (set to 0)
1	2	0-7	J1939 SPN bits 0-7
	3	0-7	J1939 SPN bits 8-15

Table 35. DTC Table Entry Format for SPN Conversion Method 1, Version 3

Bus-Off Reset Option

The bus-off reset option allows the BridgeWay to attempt to come back online after it has been knocked offline due to excessive CAN errors.

Option Disabled

If the bus-off reset option is disabled, the BridgeWay will remain offline after a bus-off condition is detected; it will not participate in any J1939 network activity. The only way to bring the module back online is to power cycle the module.

Option Enabled

If the bus-off reset option is enabled, the BridgeWay will re-initialize the CAN controller after a bus-off condition is detected. Once the controller is reinitialized, the module will attempt to go online and resume network activity on the J1939 network.

WARNING

It is recommended that the bus-off reset option be disabled for most applications. Severe network problems can arise if the option is enabled and the BridgeWay module is the node that is causing the CAN errors.

Offline Detection

The BridgeWay is able to detect when it is not connected to the J1939 network or when it is the only device on the network (lonely). In either case the module is not able to transmit or receive J1939 messages.

Online/Offline Status Indication

There is a variety of means to determine whether the BridgeWay is online on the J1939 network.

Indication Method	Description
J1939 Status LED	See J1939 Network Status LED
Input Status Register	Bit 1 of the Input Status Register in the Input buffer indicates online status. If the bit is set the module is online. If the bit is cleared the module is offline. See *Input Assembly Format* for EtherNet/IP or *Input Data* for Modbus TCP.
Status Assembly	Bit 0 of the J1939 Interface Status register in the Status Assembly indicates whether the module is online. If the bit is set the module is online. If the bit is cleared the module is offline. See *Status Assembly* for EtherNet/IP or *Status Data* for Modbus TCP.
BWConfig	The BridgeWay Configuration Tool indicates the online and offline status in the Status view.

Table 36. J1939 Online/Offline Status Indications

How Offline Detection Works

The BridgeWay is considered “offline” when it is not able to successfully transmit messages on the J1939 network. To successfully transmit a message the module must receive a low-level acknowledgement on the CAN network; if no acknowledgement is received for a transmitted message the module is then considered offline. This condition may occur when the module is not connected to the network, or if it is the only node on the network (lonely).

Note: At least one other node besides the BridgeWay module must be present on the J1939 network in order for the BridgeWay to go online.

Offline Detection Message and Timer

Since the BridgeWay uses message transmission to determine whether it is online, if there are no data points configured in the Output Table, the module must transmit a special message, the Offline Detection Message, to test for online status. The Offline Detection Message uses PGN 61184 (EF00h) with the source and destination address both set to the address of the BridgeWay.

The Offline Detection Message may be enabled or disabled in the J1939 Network configuration. When Offline Detection is enabled, the Offline Detection Time determines how often the Offline Detection Message will be sent. This effectively determines the time within which an offline condition will be detected. If the application requires that the offline status be detected quickly the time should be set to a smaller value; if the application does not require quick detection the time may be set to a larger value.

Note: The offline detection mechanism is always active regardless of whether the BridgeWay is in Run or Idle mode. The module will transmit Offline Detection Messages when it is in Idle mode. This ensures that the online status being reported is always correct.

Important: If periodic transmission of PGN 61184 could cause adverse effects in the network application, make sure to disable the Offline Detection in the configuration.

Important: The Offline Detection Time should be set as large as the application will allow. Although setting the time to a small value will provide quicker detection of an offline condition, there is a trade-off in that the Offline Detection Message is being transmitted more often. This trade-off could affect the performance of the BridgeWay and of the overall J1939 network.

Offline Detection with Offline Detection Message Disabled

When the Offline Detection Message feature in the configuration is disabled, offline detection will be performed based on the messages transmitted by the configured output data points. An offline condition will be detected whenever an output message cannot be transmitted. If the output data point transmission rate is large, an offline condition that occurs between transmissions will be detected at the next transmission.

If no output data points are configured an offline condition will not be detected.

Offline Detection with Offline Detection Message Enabled

When the Offline Detection Message feature in the configuration is enabled offline detection will be performed on the messages transmitted by the output data points as well as the Offline Detection Message. As described above, an offline condition will be detected whenever an output message is transmitted. If the configured Offline Detection Time is less than the output data point update rate, the Output Detection Message will be transmitted between output data point messages to increase the rate at which an offline condition will be detected. If output data point messages are transmitted at a faster rate than the Offline Detection Time, the Offline Detection Message will not be transmitted

J1939 Baud Rate

The BridgeWay is capable of supporting communication baud rates on the J1939 network of 125K, 250K and 500K baud. The correct baud rate must be configured through the Baud Rate parameter in the J1939 Network configuration.

Important: The standard baud rate for J1939 is 250K baud. Do not set the baud rate to a different baud unless you are certain that all devices on the network are communicating at that baud rate.

Important: Configuring the module with the incorrect baud rate may cause other devices on the network to experience bus-off faults.

Ethernet to J1939 Message Bridging

Message bridging provides the ability to send a message on J1939 from a device on the Ethernet network. The message can originate from either an EtherNet/IP or Modbus TCP request and will be transmitted once on the network. This feature allows message transmission that does not adhere to the cyclic nature of a configured output data point.

Sending J1939 Messages from Ethernet

Bridged Message Fields

Each bridged J1939 message is created based on information passed into the BridgeWay in an EtherNet/IP or Modbus TCP request. Regardless of the protocol used for the request, the same information is included in the request.

Message Field	Description	Valid Range
J1939 Address	The address of the destination device on the J1939 network. If the address is set to 255 the message will be broadcast. **Note:** This field is ignored for PDU2 PGNs as they are broadcast by definition.	0-253, 255
PGN	The PGN value to be used for the transmitted message.	0-65535
PGN Data Page	The PGN Data Page to be used for the transmitted message.	0,1
Data Length	The length of the data field in bytes.	0-250 (EtherNet/IP) 0-232 (Modbus TCP)
Data	The message data to be transmitted in the message.	

Table 37. Bridged Message Fields

Bridged Message Transmission

When a valid bridged request is received on Ethernet, the J1939 message is created using the request fields and transmitted immediately.

The message is only transmitted one time for each Ethernet bridged request.

Bridged Message Transmission Result

J1939 is not a request/response network protocol. Although EtherNet/IP and Modbus TCP are request/response and the message was originated on Ethernet, there will not be a response to the J1939 message that is transmitted. The response on Ethernet to the bridged request will hold the result of the J1939 message transmission.

EtherNet/IP Message Bridging

Bridged message requests from EtherNet/IP are done by sending a BridgedRequest service request to an instance of the J1939 Bridge object using a path to port 3.

Bridged Message CIP Request

Path

The CIP request path must use the following format:

<BridgeWay_IP>,3,<J1939Address>

Where

<BridgeWay_IP>	The IP address of the BridgeWay
<J1939Address>	Destination J1939 address or 255 for broadcast

Service

0x32 (50 dec) BridgedRequest

Class

0x70 (112 dec) J1939 Bridge object

Instance

1	Use PGN Data Page 1
2	Use PGN Data Page 2

Attribute

The attribute number specifies the PGN number and may be 0-65535

Data

The message data, up to 250 bytes

Bridged Message CIP Response

The response for all message requests will contain only the status/extended status information and no message data.

The following response status are sent by the J1939 Bridge object.

Status	Extended Status	Meaning
0	0	Transmission successful
0x01	0x0204	Timeout waiting for the J1939 message to transmit. This typically means that the BridgeWay is offline.
0x01	0x0312	Invalid J1939 address in the path
0x01	0x0315	Invalid CIP path in request
0x16	0	Unsupported CIP class or instance
0x08	0	Unsupported CIP service
0x20	0	Invalid attribute value or data length
0x02	0	J1939 transmit queue is full
0x1E	0	Internal error

Table 38. EtherNet/IP Bridged Message Response Status

EtherNet/IP Bridging Examples

Message to Address 10 with PGN 256, DP 0, 5 bytes of Data

Path	<IP>,3,10
Svc/Cls/Ist/Att	0x32 / 0x70 / 1 / 256
Data	5 bytes of message data

Broadcast Message with PGN 512, DP 0, 8 bytes of Data

Path	<IP>,3,255
Svc/Cls/Ist/Att	0x32 / 0x70 / 1 / 512
Data	8 bytes of message data

Broadcast Message with PGN 62003, DP 0, 8 bytes of Data

Path	<IP>,3,255
Svc/Cls/Ist/Att	0x32 / 0x70 / 1 / 62003
Data	8 bytes of message data

Message to Address 5 with PGN 784, DP 1, 5 bytes of Data

Path	<IP>,3,5
Svc/Cls/Ist/Att	0x32 / 0x70 / 2 / 784
Data	5 bytes of message data

Modbus TCP Message Bridging

Messages are bridged to J1939 from Modbus TCP by writing to a set of Holding registers (starting at 42201) and reading the result from a set of Input registers (starting at 32325).

Note: The result may also be read at Holding registers starting at 42325.

Note: The Modbus register addresses below are 1-offset. Some Modbus controllers specify registers 0-offset; in that case, the register or bit addresses are decremented by 1.

Note: All the registers shown below are subject to byte swapping if this feature is enabled in BWConfig, **with the exception** of the Request Counter, which will remain Big Endian.

Bridged Message Request Registers

The bridged message fields are specified in the following Holding registers.

Holding Register	Register Count	Description
2201	1	Request Counter This register is incremented by 1 to trigger the transmission of the bridged request. As long as the Request Counter is not incremented, the message request registers below can be changed without affecting the message transmission. Once the Request Counter is incremented, the message request registers should not be altered until the Result Counter (Input Register 2325) matches the Request Counter. See the note above.
2202	1	J1939 Address
2203	1	Must be set to 0x32
2204	1	Must be set to 0x70
2205	1	PGN Data Page Set to 1 for DP 0 Set to 2 for DP 1
2206	1	PGN
2207	1	Message data length in bytes (1 to 232 bytes)
2208	Up to 116	Message data (up to 232 bytes)

Table 39. Modbus TCP Bridged Message Request Registers

Bridged Message Result Registers

The status/extended status result for the bridged request can be read in the following Input registers.

Input Register	Register Count	Description
2325	1	Result Counter This register is incremented by 1 to indicate that a bridged transmission has completed.
2326	1	Bridged result status
2327	1	Bridged result extended status

Table 40. Modbus TCP Bridged Message Result Registers

The following status and extended status will be returned for bridged results.

Status	Extended Status	Meaning
0	0	Transmission successful
0x01	0x0204	Timeout waiting for the J1939 message to transmit. This typically means that the BridgeWay is offline.
0x01	0x0312	Invalid J1939 address in the path
0x01	0x0315	Invalid CIP path in request
0x16	0	Unsupported CIP class or instance
0x08	0	Unsupported CIP service
0x20	0	Invalid attribute value or data length
0x02	0	J1939 transmit queue is full
0x1E	0	Internal error

Table 41. Modbus TCP Bridged Result Status Values

Modbus TCP Bridging Examples

Message to Address 10 with PGN 256, DP 0, 5 bytes of Data

2202	10
2203	0x32
2204	0x70
2205	1
2206	256
2207	5
2208-2210	Message data (in this case, register 2210 includes 1 pad byte)

Broadcast Message with PGN 512, DP 0, 8 bytes of Data

2202	255
2203	0x32
2204	0x70
2205	1
2206	512
2207	8
2208-2211	Message data

Broadcast Message with PGN 62003, DP 0, 8 bytes of Data

2202	255
2203	0x32
2204	0x70
2205	1
2206	62003
2207	8
2208-2211	Message data

Message to Address 5 with PGN 784, DP 1, 5 bytes of Data

2202	5
2203	0x32
2204	0x70
2205	2
2206	784
2207	5
2208-2210	Message data (in this case, register 2210 includes 1 pad byte)

Status and Diagnostics

BridgeWay LEDs

There is a group of LED indicators on the front of the BridgeWay that is used to indicate the status of the module and the network interfaces. The layout of the LEDs is shown below.

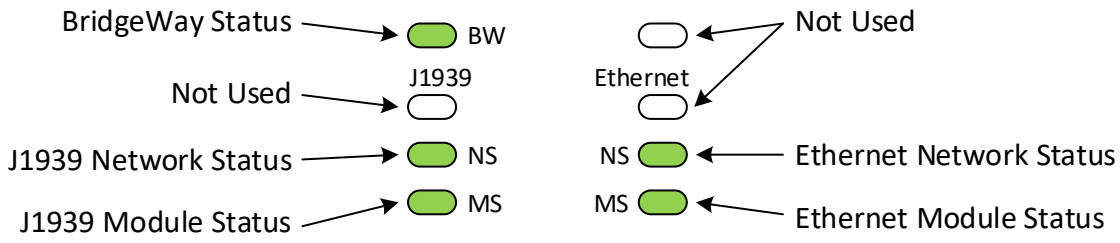

Figure 34. BridgeWay LEDs

BridgeWay Status LED

LED State	Summary	Description
Flashing Green	Idle	Module is in Idle mode.
Solid Green	Run	Module is in Run mode.
Solid Amber	Bootloader / Initialization	The LED will be in this state immediately after power is applied. If the bootloader is running all LEDs will be Amber.

Table 42. BridgeWay Status LED States

J1939 Network Status LED

LED State	Summary	Description
Flashing Green	Initializing / Offline	The J1939 network interface is being initialized or is waiting to come online. The module is not participating in J1939 network activity.
Solid Green	Online	A J1939 network address has been successfully claimed and the module is online and active.
Flashing Red/Green	Online with Faults	The module is online and active on the J1939 network, but faults have been detected. Check the J1939 status codes to determine the cause of the fault.
Solid Red	Offline / Bus-Off	The module is not participating in the J1939 network.
Flashing Red	Offline with Faults	The module is not participating in the J1939 network and faults have been detected. Check the J1939 status codes to determine the cause of the fault.
Solid Amber	Bootloader	If the bootloader is running all LEDs will be Amber.

Table 43. J1939 Network Status LED States

J1939 Module Status LED

LED State	Summary	Description
Flashing Green	Initializing	The J1939 network interface is initializing and not configured.
Solid Green	Configured	The J1939 network interface has been successfully configured.
Solid Red	Initialization Error	An error was detected in the configuration and the J1939 network interface initialization could not complete.
Solid Amber	Bootloader	If the bootloader is running all LEDs will be Amber.

Table 44. J1939 Module Status LED States

Ethernet Network Status LED

LED State	Summary	Description
Solid Green	Connected	There is at least one connection from an Ethernet Controller.
Flashing Green	Network OK	There are no active connections.
Solid Red	Address conflict	The module's IP address is already in use by another module.
Flashing Red	Connection Timeout	One or more of the I/O connections has timed out.
Solid Amber	Bootloader	If the bootloader is running all LEDs will be Amber.

Table 45. Ethernet Network Status LED States

Note: When both EtherNet/IP and Modbus TCP are enabled in the Ethernet Network configuration, the Network Status LED will only show Connected and Timeout status for EtherNet/IP connections.

Ethernet Module Status LED

LED State	Summary	Description
Flashing Green	Initializing	The Ethernet network interface is initializing and not configured.
Solid Green	Configured	The Ethernet network interface has been successfully configured.
Flashing Red	Configuration	There is an error in the configuration.
Solid Red	Initialization Error	An error was detected in the configuration and the Ethernet network interface initialization could not complete.
Solid Amber	Bootloader	If the bootloader is running all LEDs will be Amber.

Table 46. Ethernet Module Status LED States

Ethernet Network LEDs

The Ethernet Network LEDs are located on the RJ-45 connector.

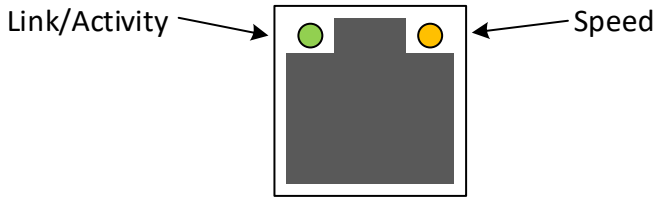

Figure 35. Ethernet Network LEDs

Ethernet Link/Activity LED

The Link/Activity LED is green if the link is up and flashes green as Ethernet packets are received or transmitted. The LED is off if there is no link.

Ethernet Speed LED

The Speed LED is Amber if the link speed is 100Mbps. The LED is off if the speed is 10Mbps.

BWConfig Status View

Status Tab

The Status tab on the BWConfig Status view contains general status information for the BridgeWay and the network interfaces.

The following subsections describe the status and state values that may be displayed for some of the Status tab fields.

BridgeWay Error

State	Description
No Error	The module has successfully initialized and is running.
Configuration Error	An error in the configuration was detected.
Initialization Error	An error occurred during startup and initialization.

Table 47. BridgeWay Error Values

Ethernet Interface State

State	Description
Initializing	The Ethernet interface is initializing.
Configuration Error	There is an error in the configuration and the Ethernet interface is not able to be initialized.
Initialization Error	There is an error in the system or Ethernet network that caused the Ethernet interface initialization to fail.
Address Error	An IP address conflict was detected.
Offline	The Ethernet interface is configured and initialized, but no Ethernet link is detected.
Online	The Ethernet interface is online and participating in network activity.

Table 48. Ethernet Interface States

Ethernet Status

State	Description
No IP Assigned	No IP address has been assigned. This typically the state while waiting for a DHCP address assignment. The IP Address State will display "Waiting for DHCP".
Not Connected	The module is online, but no Ethernet controller has made any I/O connection.
Connected	1 or more I/O connections are active.
Connection Timeout	1 or more I/O connections have timed out.
IP Address Conflict	An IP address conflict was detected.

Table 49. Ethernet Status Values

J1939 Interface State

State	Description
Initializing	The J1939 interface is initializing.
Configuration Error	There is an error in the configuration and the J1939 interface is not able to be initialized.
Initialization Error	There is an error in the system or J1939 network that caused the J1939 interface initialization to fail.
Address Error	A J1939 address conflict was detected.
Offline	The J1939 interface is configured and initialized but is unable to communicate on the CAN network.
Online	The interface is online and participating in J1939 network activity.

Table 50. J1939 Interface States

J1939 Status

Status	Description
Configured	The network interface is configured and initialized and is attempting to go online for the first time.
Online	The interface is online and participating in J1939 network activity.
Offline	The interface is configured and initialized but is not online on the J1939 network.
Address Lost	All addresses in the Address List have been exhausted due to address conflicts and the interface has been knocked offline.
Transmit Error	The interface is not able to transmit on the J1939 network.
Bus-Off	The interface has been knocked offline due to CAN network errors.
Transport Protocol Error	An error occurred during a J1939 transport protocol session.

Table 51. J1939 Status Values

Diagnostic Counters Tab

The Diagnostic Counters tab on the BWConfig Status view displays counters and status information that are specific to each of the network interfaces.

BridgeWay Web Pages

The web pages on the BridgeWay are accessible using any web browser by entering the IP address of the BridgeWay as the URL.

Web Status Tabs

The web page contains 3 status tabs, for BridgeWay, Ethernet and J1939, each displaying status and state information for the associated module or network interface. The information displayed on the web page status tabs mirror that displayed on the BWConfig Status view described above.

Web I/O Table Tabs

The web page contains an Input Table and Output Table tab. These tabs display the current data in the Input and Output buffers of the BridgeWay.

The displayed word size, starting offset and byte count can be set at the top of the tab, as well as the display radix, allowing the data display to be configured to meet the user's needs.

Status Data

The status data contains status and diagnostic information for the J1939 network interface. The status data is accessible through the EtherNet/IP Status Assembly (see *Status Assembly*) or the Modbus Status Data registers (see *Status Data*). See the references sections for complete details.

Specifications

General

Weight	184g
Dimensions (L x W x H)	110 x 35 x 101 mm 4.33 x 1.38 x 3.98 inches
Protection class	IP20, NEMA rating 1
Mounting	DIN rail (35 x 7.5/15) or Wall Mount

Certifications

UL	UL 61010-1 UL 61010-2-201
Hazardous Locations	ANSI/ISA 12.12.01
ATEX	EN 60079-0 EN 60079-15
CE	EN 61000-6-2 EN 61000-6-4

Electrical

Power	7 – 40 VDC
Current consumption	300mA at 24 VDC

Environmental

Operating temp (Ta)	IEC 60068-2-1 IEC 60068-2-2	-25 to 70 °C
Storage temp	IEC 60068-2-1 IEC 60068-2-2	-40 to 85 °C
Relative Humidity	IEC 60068-2-30	5-95 % non condensing
Installation altitude	Up to 2000 m	

Emission and Immunity

Electrostatic discharge	EN 61000-4-2	+/- 4 kV Contact, +/- 8kV Air
Electromagnetic RF fields	EN 61000-4-3	10 V/m 80 MHz - 1 GHz 3 V/m 1.4 GHz – 2 GHz 1 V/m 2 GHz – 2.7 GHz
Fast Transients	EN 61000-4-4	+/- 2kV AC, +/- 1 kV IO
Surge protection	EN 61000-4-5	+/- 1 kV Diff, +/- 2kV Comm
RF conducted interference	EN 61000-4-6	10 V/rms
Emissions (Radiated)	EN 55011	30 MHz - 100 MHz, Class A
Emissions (Conducted)	EN55011	150 kHz - 39 MHz, Class A

Certifications

Atex Certification

e II 3 G Ex nA IIC T4 Gc

II 3 G

Demko 17 ATEX 1953X

Side Label

Example of side label

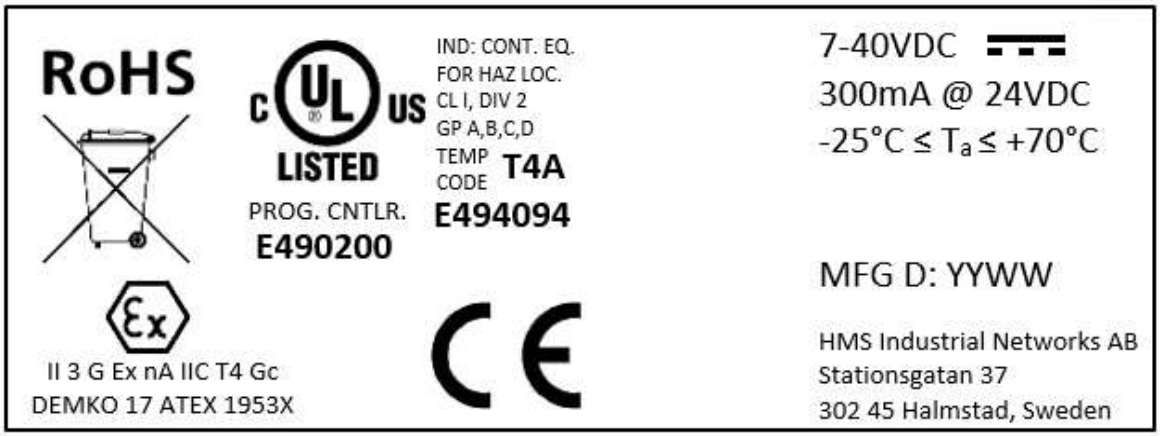

I/O Table Configuration Sizes and Limits

Input

4 – 500 bytes when EtherNet/IP is enabled
4 – 2048 bytes when only Modbus TCP is enabled

Output

4 – 496 bytes when EtherNet/IP is enabled
4 – 2048 bytes when only Modbus TCP is enabled

Status

12 bytes

Data Points

200 total (input + output)

PGN Messages

120 input
100 output

Note: Multiple data points configured with the same PGN/Target Address constitute a single PGN message.

Up to 20 data points may be configured for the same PGN/Target Address

J1939 Specifications

Message Types

Supports transmission and reception of the following message types:

- PDU1 destination specific
- PDU1 broadcast
- PDU2

Addressing

Claims and protects a single configurable address.
Self-configurable using a list of addresses.

Transport Protocol Sessions

Support of J1939 transport protocol for large messages with the following limitations:

- Single outgoing session (either BAM or RTS/CTS).
- 3 concurrent incoming sessions (any mixture of BAM and RTS/CTS).

Connectors

Power

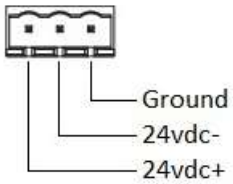

Figure 36. Power Connector

Use Phoenix connector part number MSTB 2,5/3-ST-5,08

J1939

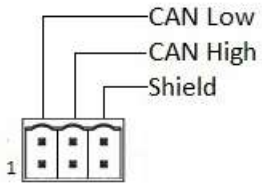

Figure 37. J1939 Connector

Use Phoenix connector part number DFMC 0 5/ 3-ST-2 54.

Ethernet

The BridgeWay uses a standard Ethernet RJ-45 connector.

USB

The BridgeWay uses a standard USB Micro-B connector.

Support

Technical Product Assistance

If you require BridgeWay product technical support by phone:

- Call 248-549-1200
- Dial 0 for the Operator
- Ask for BridgeWay Support

If you require support by email:

- Email: productsupport@pyramidsolutions.com
- Subject: "BW4031 Support Request"
- Provide a detailed explanation of your question or issue in the email text.

You can also obtain BW4031 files and information online at the following URL:
http://pyramidsolutions.com/support/network-connectivity-support/

Contact Information

Pyramid Solutions, Inc.
30200 Telegraph Road
Suite 440
Bingham Farms, Michigan 48025

Phone: 1-248-549-1200
Toll free: 1-888-PYRASOL
Fax: 1-248-549-1400
Website: www.pyramidsolutions.com